en

remeha

Installation and Service Manual

Floor-standing condensing gas boiler

Gas 120 ACE

Gas 120 ACE - 65
Gas 120 ACE - 90
Gas 120 ACE - 115

Dear Customer,

Thank you very much for buying this appliance.

Please read through the manual carefully before using the product, and keep it in a safe place for later reference. In order to ensure continued safe and efficient operation we recommend that the product is serviced regularly. Our service and customer service organisation can assist with this.

We hope you enjoy years of problem-free operation with the product.

Contents

1 Safety . . . 5
1.1 General safety instructions . . . 5
1.2 Recommendations . . . 7
1.3 Liabilities . . . 8
1.3.1 Manufacturer's liability . . . 8
1.3.2 Installer's liability . . . 9
1.3.3 User's liability . . . 9

2 Symbols used . . . 10
2.1 Symbols used in the manual . . . 10
2.2 Symbols used on the appliance . . . 10

3 Technical specifications . . . 11
3.1 Homologations . . . 11
3.1.1 Directives . . . 11
3.1.2 EC Declaration of Conformity . . . 11
3.1.3 Gas categories . . . 11
3.1.4 Certifications . . . 11
3.1.5 Factory test . . . 12
3.2 Technical data . . . 12
3.2.1 ErP technical parameters . . . 14
3.2.2 Circulating pump (not provided) . . . 14
3.2.3 Sensor specifications . . . 15
3.3 Dimensions and connections . . . 16
3.4 Electrical diagram . . . 17
3.4.1 Electrical diagram of boiler . . . 17

4 Description of the product . . . 19
4.1 General description . . . 19
4.2 Operating principle . . . 19
4.2.1 Gas/air setting . . . 19
4.2.2 Settings and safety devices . . . 19
4.3 Main boiler components . . . 20
4.4 PCBs . . . 20
4.4.1 Description of the CU-GH-08 PCB . . . 20
4.5 Standard delivery . . . 20
4.6 Accessories & options . . . 20

5 Installation . . . 21
5.1 Installation regulations . . . 21
5.2 Choice of the location . . . 21
5.2.1 Data plate . . . 21
5.2.2 Space required - Boiler ventilation . . . 21
5.2.3 Ventilation . . . 22
5.2.4 Fitting the outdoor sensor . . . 23
5.3 Transport . . . 24
5.4 Unpacking and preparing the boiler . . . 24
5.5 Hydraulic connections . . . 27
5.5.1 Water treatment . . . 27
5.5.2 Flushing new installations and installations less than 6 months old . . . 28
5.5.3 Flushing an existing installation . . . 28
5.5.4 Connecting the heating circuit . . . 28
5.5.5 Connecting the condensate discharge pipe . . . 28
5.5.6 Filling the siphon . . . 29
5.6 Gas connection . . . 29
5.6.1 Gas supply . . . 30
5.7 Air supply/flue gas outlet connections . . . 30
5.7.1 Classification . . . 30
5.7.2 Lengths of the air/flue gas pipes . . . 33
5.7.3 Dimensions of flue gas outlet pipe . . . 34
5.7.4 Connection to the flue gas pipe . . . 35

6 Operation . . . 37
6.1 Settings . . . 37

7 Maintenance . . . 38
7.1 General . . . 38
7.2 Specific maintenance operations . . . 38
7.2.1 Cleaning the siphon . . . 38
7.2.2 Checking the ionisation current . . . 39
7.2.3 Replace the ionization/ignition electrode . . . 40
7.2.4 Servicing the forced flue connection pipes . . . 40
7.2.5 Checking the burner and cleaning the heat exchanger . . . 40
7.2.6 Checking the non-return valve . . . 42

8 Decommissioning . . . 43
8.1 Decommissioning procedure . . . 43
8.2 Recommissioning procedure . . . 43

9 Disposal and recycling . . . 44

10 Environmental . . . 45
10.1 Energy savings . . . 45
10.2 Room thermostat and settings . . . 45

11 Warranty . . . 46
11.1 General . . . 46
11.2 Terms of warranty . . . 46

12 Spare parts . . . 47
12.1 General . . . 47
12.2 Spare parts lists . . . 47
12.2.1 Exchanger . . . 47
12.2.2 Gas circuit . . . 48
12.2.3 Hydraulic circuit . . . 50
12.2.4 Boiler body . . . 51
12.2.5 Casing . . . 52
12.2.6 Boiler PCB housing . . . 53

13 Appendix . . . 54
13.1 Package fiche - Boilers . . . 54
13.2 Product fiche - Temperature Controls . . . 55
13.3 Product fiche . . . 55

1 Safety

1.1 General safety instructions

For the installer and end user:

Danger
This appliance can be used by children aged from 8 years and above and persons with reduced physical, sensory or mental capabilities or lack of experience and knowledge if they have been given supervision or instruction concerning use of the appliance in a safe way and understand the hazards involved. Children shall not play with the appliance. Cleaning and user maintenance shall not be made by children without supervision.

Caution
Do not touch the flue gas pipes. Depending on the boiler settings, the temperature of the flue gas pipes can rise to over 60°C.

Caution
Do not touch radiators for long periods. Depending on the boiler settings, the temperature of the radiators may exceed 60°C.

Caution
Take precautions with the domestic hot water. Depending on the boiler settings, the domestic hot water temperature may exceed 65°C.

Danger of electric shock
Before any work, switch off the mains supply to the boiler.

For the installer:

Danger
If you smell gas:

1. Do not use a naked flame, do not smoke, do not operate electrical contacts or switches (doorbell, light, motor, lift, etc.).
2. Shut off the gas supply.
3. Open the windows.
4. Locate the probable leak and seal it immediately.
5. If the leak is before the gas meter, contact the gas supplier.

Danger
If you smell flue gases:

1. Switch off the appliance.
2. Open the windows.
3. Locate the probable source of the flue gas leak and fix it immediately.

Warning
The condensation drain must not be changed or sealed. If a condensate neutralisation system is used, the system must be cleaned regularly in accordance with the instructions provided by the manufacturer.

For the end user:

Danger
If you smell gas:

1. Do not use a naked flame, do not smoke, do not operate electrical contacts or switches (doorbell, light, motor, lift, etc.).
2. Shut off the gas supply.
3. Open the windows.
4. Evacuate the property.
5. Contact a qualified professional.

Danger
If you smell flue gases:

1. Switch off the appliance.
2. Open the windows.
3. Evacuate the property.
4. Contact a qualified professional.

1.2 Recommendations

Danger
For safety reasons, we recommend fitting smoke and CO_2 detectors and alarms at suitable places in your home.

Caution
- The boiler must always be connected to the protective earthing.
- Earthing must comply with the prevailing installation standards.
- Earth the appliance before making any electrical connections.

For the type and calibre of the protective equipment, refer to the chapter Electrical Connections in the Installation and Service Manual.

Caution
If a power cord comes with the appliance and it turns out to be damaged, it must be replaced by the manufacturer, its after sales service or persons with similar qualifications in order to obviate any danger.

Caution
A disconnection device must be fitted to the permanent pipes in accordance with the installation rules.

Caution
Power the appliance via a circuit that includes an omni-polar switch with contact opening distance of 3 mm or more.

Caution
Drain the boiler and heating system if the home is left empty for a long period of time and there is a chance of frost.

Caution
Remove the boiler casing only to perform maintenance and repair work. Always put the casing back in place after such work.

Caution
To enjoy warranty cover, no modifications must be made to the boiler.

Caution
The frost protection function only protects the boiler, not the heating system.

Caution
The frost protection function does not work if the boiler is powered off.

Caution
The appliance should be switched to Summer or Frost Protection mode rather than be switched off in order to guarantee the following functions:

- Avoidance of pumps blocking
- Frost Protection

Important
Respect the minimum and maximum water inlet pressure to ensure correct operation of the boiler: refer to the chapter Technical Specifications.

Important
Only qualified professionals are permitted to install the boiler, in accordance with prevailing local and national regulations.

Important

- Never remove or cover labels and data plates affixed to the boiler.
- Labels and data plates must be legible throughout the entire lifetime of the boiler. Immediately replace damaged or illegible instructions and warning labels.

Important
Keep this document close to the place where the appliance is installed.

1.3 Liabilities

1.3.1 Manufacturer's liability

Our products are manufactured in compliance with the requirements of the various Directives applicable. They are therefore delivered with the CE marking and any documents necessary. In the interests of the quality of our products, we strive constantly to improve them. We therefore reserve the right to modify the specifications given in this document.

Our liability as manufacturer may not be invoked in the following cases:

- Failure to abide by the instructions on installing and maintaining the appliance.
- Failure to abide by the instructions on using the appliance.
- Faulty or insufficient maintenance of the appliance.

1.3.2 Installer's liability

The installer is responsible for the installation and initial commissioning of the appliance. The installer must observe the following instructions:

- Read and follow the instructions given in the manuals provided with the appliance.
- Install the appliance in compliance with prevailing legislation and standards.
- Carry out initial commissioning and any checks necessary.
- Explain the installation to the user.
- If maintenance is necessary, warn the user of the obligation to check the appliance and keep it in good working order.
- Give all the instruction manuals to the user.

1.3.3 User's liability

To guarantee optimum operation of the system, you must abide by the following instructions:

- Read and follow the instructions given in the manuals provided with the appliance.
- Call on a qualified professional to carry out installation and initial commissioning.
- Get your installer to explain your installation to you.
- Have the required inspections and maintenance carried out by a qualified installer.
- Keep the instruction manuals in good condition close to the appliance.

2 Symbols used

2.1 Symbols used in the manual

This manual uses various danger levels to draw attention to special instructions. We do this to improve user safety, to prevent problems and to guarantee correct operation of the appliance.

Danger
Risk of dangerous situations that may result in serious personal injury.

Danger of electric shock
Risk of electric shock.

Warning
Risk of dangerous situations that may result in minor personal injury.

Caution
Risk of material damage.

Important
Please note: important information.

See
Reference to other manuals or pages in this manual.

2.2 Symbols used on the appliance

Fig.1

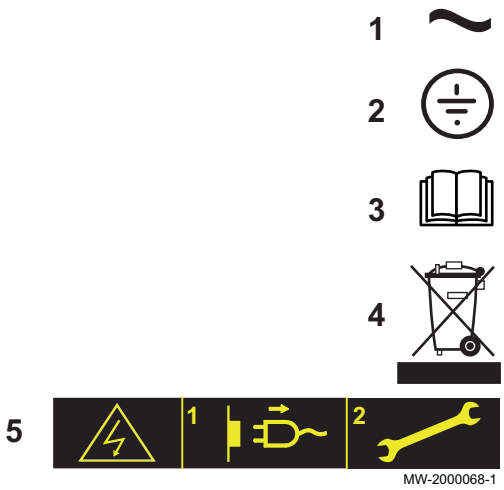

1 Alternating current.
2 Protective earthing.
3 Before installing and commissioning the appliance, carefully read the instruction manuals provided.
4 Dispose of used products through an appropriate recovery and recycling structure.
5 Caution: danger of electric shock, live parts. Disconnect the mains power prior to carrying out any work.

3 Technical specifications

3.1 Homologations

3.1.1 Directives

This product has been manufactured and put into circulation in accordance with the requirements and standards of the following European Directives:

- Gas Appliances Regulation (EU) (2016/426)
- Pressure Equipment Directive 2014/68/EU
- Electromagnetic Compatibility Directive (2014/30/EU).
- Low Voltage Directive (2014/35/EU).
- Efficiency Directive (92/42/EEC)
- European Ecodesign Directive (2009/125/EC)
  EU Regulation (813/2013)
- Energy Labelling Framework Regulation (EU) (2017/1369)
  EU Regulation (811/2013)
- BS 7074, Part 1: Application, selection and installation of expansion vessels and ancillary equipment for sealed water systems
- BS 6644: Specification for the installation of gas-fired condensing boilers with a nominal output exceeding 70 kW
- BS EN 12828: Design for water-based heating systems
- BS EN 13831: Closed expansion vessels

Apart from the legal provisions and Directives, the additional Directives described in these instructions must also be observed.

For all provisions and Directives referred to in these instructions, it is agreed that all addenda or subsequent provisions will apply at the time of installation.

3.1.2 EC Declaration of Conformity

The unit complies with the standard type described in the EC declaration of conformity. It has been manufactured and commissioned in accordance with European directives.

The original declaration of conformity is available from the manufacturer.

3.1.3 Gas categories

Tab.1 **Czech Republic**, **Spain**, **Greece**, **Portugal**, **Switzerland**, **UK**

Category	Gas type	Connection pressure (mbar)	Gas 120 ACE - 65	Gas 120 ACE - 90	Gas 120 ACE - 115
$II_{2H3B/P}$	G20 (H gas)	20	X	X	X
	G30/G31 (butane/propane)	30/37/50	X	X	X

3.1.4 Certifications

Tab.2 Certifications

CE number	0085CT0009
NOx class	6 (EN 15502-1)

Type of flue gas connection	Chimney : • B_{23} • B_{23P} • B_{33}
	Forced flue: • C_{13} • C_{13X} • C_{33} • C_{33X} • C_{43} • C43X • C_{53} • C_{63} • C_{63X} • C_{83} • C_{83X} • C_{93} • C_{93X}

3.1.5 Factory test

Before leaving the factory, each boiler is optimally set and tested for:

- Electrical safety,
- Settings (CO_2),
- Water tightness,
- Gas tightness,
- Parameter setting.

3.2 Technical data

Tab.3 General

Gas 120 ACE			Gas 120 ACE - 65	Gas 120 ACE - 90	Gas 120 ACE - 115
Nominal heat output (Pn) Central heating operation (80 °C/60 °C)	min–max	kW	12.0 - 61.5	14.1 - 84.2	18.9 - 103.9
Nominal heat output (Pn) Central heating operation (50 °C/30 °C)	min–max	kW	13.5 - 65.0	15.8 - 89.5	21.2 - 109.7
Nominal input power (Qn) Heating mode (Hi)	min–max	kW	12.2 - 62.0	14.6 - 86.0	19.6 - 107.0
Nominal input power (Qn) Heating operation (Hi) G31 (propane)	min–max	kW	12.2 - 62.0	22.1 - 86.0	21.2 - 107.0
Nominal input power (Qn) Central heating operation (Hs)	min–max	kW	13.7 - 68.9	16.2 - 95.5	21.7 - 118.9
Full load heating mode efficiency (Hi) (80/60 °C) (92/42/EEC)		%	99.2	97.9	97.1
Full load heating mode efficiency (Hi) (50 °C/ 30 °C)		%	104.6	104.1	102.5
Part load heating mode efficiency (92/42/EEC) (return temperature 30 °C)		%	110.4	108.1	108

Tab.4 Gas and flue gas values

Gas 120 ACE			Gas 120 ACE - 65	Gas 120 ACE - 90	Gas 120 ACE - 115
G20 gas consumption (H gas)(1)	min.–max.	m^3/h	1.3 - 6.6	1.5 - 9.1	2.0 - 11.7
Gas consumption G31 (propane) (1)	min–max	m^3/h	0.5 - 2.5	0.9 - 3.5	0.9 - 4.5

Gas 120 ACE			Gas 120 ACE - 65	Gas 120 ACE - 90	Gas 120 ACE - 115
Gas resistance G20 (H gas)(2)	max	mbar	2.0	2.5	3.0
BREAM NOx		mg/kWh	32	29	35
Flue gas quantity	min–max	m^3/h	18 - 90	22 - 125	30 - 160
Flue gas temperature	min–max	°C	30 - 120	30 - 120	30 - 120
Maximum counter pressure (Pn)		Pa	100	160	220

(1) Gas consumption based on lower heating value in standardised conditions: T=288.15 K, p=1013.25 mbar. Gag 30.33; G25 29.25; G31 88.00 MJ/m3
(2) Gas resistance between boiler connection and measurement point on the gas valve unit

Tab.5

Gas 120 ACE			Gas 120 ACE - 65	Gas 120 ACE - 90	Gas 120 ACE - 115
Gas inlet pressure G20 (H gas)	min–max	mbar	17 - 25	17 - 25	17 - 25
G30/G31 gas inlet pressure (Butane/Propane)	min–max	mbar	37 - 50	37 - 50	37 - 50
G31 gas inlet pressure (Propane)	min–max	mbar	37 - 50	37 - 50	37 - 50

Tab.6 Central heating circuit data

Gas 120 ACE			Gas 120 ACE - 65	Gas 120 ACE - 90	Gas 120 ACE - 115
Water content		l	7.1	10.1	10.1
Water operating pressure	min	bar	0.8	0.8	0.8
Water operating pressure (MOP)	max	bar	4.0	4.0	4.0
Water temperature	max	°C	110	110	110
Operating temperature	max	°C	90	90	90
Pressure drop secondary circuit (ΔT = 20 K)		mWC	1.7	1.6	2.6
Maximum permitted temperature difference(1)	max	°C	40(1)	40(1)	35(1)

(1) with a maximum flow temperature of 80 °C

Tab.7 Electrical data

Gas 120 ACE			Gas 120 ACE - 65	Gas 120 ACE - 90	Gas 120 ACE - 115
Supply voltage (AC)		V	230	230	230
Power consumption – full load	max	W	92	124	180
Power consumption - low load	max	W	25	24	34.4
Power consumption – standby	max	W	6	5	9
Electrical protection rating		IP	X1B	X1B	X1B
Fuses	Main	A	10	10	10

Tab.8 Other data

Gas 120 ACE			Gas 120 ACE - 65	Gas 120 ACE - 90	Gas 120 ACE - 115
Total weight (empty)		kg	98	109	109
Average acoustic level at a distance of one metre from the boiler		dB(A)	40	45	45

See
The back cover for contact details.

3.2.1 ErP technical parameters

Tab.9 Technical parameters for boiler space heaters

Product name			Gas 120 ACE - 65	Gas 120 ACE - 90	Gas 120 ACE - 115
Condensing boiler			Yes	Yes	Yes
Low-temperature boiler(1)			No	No	No
B1 boiler			No	No	No
Cogeneration space heater			No	No	No
Combination heater			No	No	No
Rated heat output	*Prated*	kW	62	84	104
Useful heat output at rated heat output and high temperature regime(2)	P_4	kW	61.5	84.2	103.9
Useful heat output at 30% of rated heat output and low temperature regime(1)	P_1	kW	20.5	27.9	34.7
Seasonal space heating energy efficiency	η_s	%	94	-	-
Useful efficiency at rated heat output and high temperature regime(2)	η_4	%	89.4	88.2	87.5
Useful efficiency at 30% of rated heat output and low temperature regime(1)	η_1	%	99.5	97.4	97.3
Auxiliary electricity consumption					
Full load	*elmax*	kW	0.092	0.124	0.180
Part load	*elmin*	kW	0.025	0.024	0.034
Stand-by	P_{SB}	kW	0.006	0.005	0.009
Other specifications					
Standby heat loss	P_{stby}	kW	0.114	0.119	0.119
Ignition burner power consumption	P_{ign}	kW	-	-	-
Annual energy consumption	Q_{HE}	GJ	190	-	-
Sound power level, indoors	L_{WA}	dB	55	61	60
Emissions of nitrogen oxides	NO_x	mg/kWh	29	41	41

(1) Low temperature means for condensing boilers 30°C, for low temperature boilers 37°C and for other heaters 50°C return temperature (at heater inlet).
(2) High temperature regime means 60 °C return temperature at heater inlet and 80 °C feed temperature at heater outlet.

See
The back cover for contact details.

3.2.2 Circulating pump (not provided)

The boiler is supplied without a circulating pump. Take the boiler pressure drop and system pressure drop into account when selecting a pump.

Caution
The maximum output of a pump that can be connected is 200 W. Above this, use an auxiliary relay adapted to the pump output.

If possible, install the pump in direct connection to the boiler on the return circuit.

For more information, see

- **Circulating pump**

The maximum difference in temperature between the flow water and the return water, and the speed at which the boiler temperature increases, are restricted by the boiler's control system.

Tab.10 Minimum flow to be guaranteed

Minimum flow to be guaranteed in the boiler	Unit	Gas 120 ACE - 65	Gas 120 ACE - 90	Gas 120 ACE - 115
Minimum flow rate	litres/hour	290	340	455

Fig.2 Pressure drops for **Gas 120 ACE - 65**

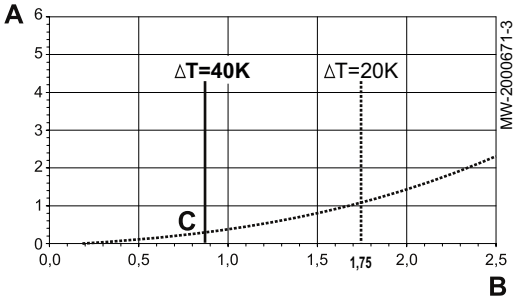

A Dynamic head in mWc
B Water flow rate (m^3/h)
C Pressure drops
ΔT Maximum temperature difference between the flow water and the return water in the boiler

Fig.3 Pressure drops for **Gas 120 ACE - 90**

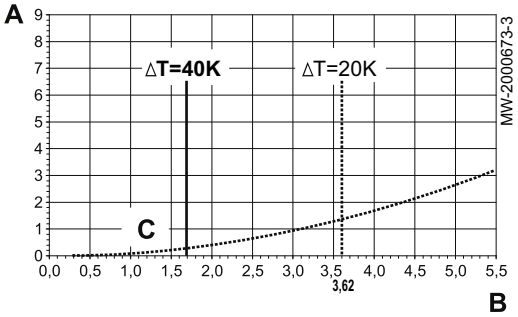

A Dynamic head in mWc
B Water flow rate (m^3/h)
C Pressure drops
ΔT Maximum temperature difference between the flow water and the return water in the boiler

Fig.4 Pressure drops for **Gas 120 ACE - 115**

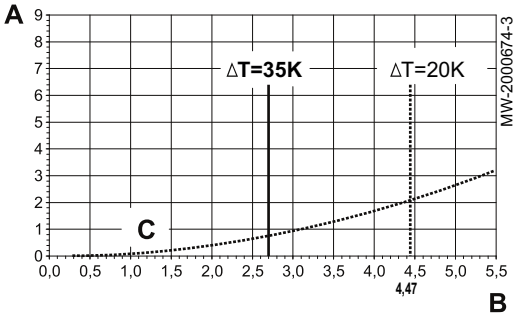

A Dynamic head in mWc
B Water flow rate (m^3/h)
C Pressure drops
ΔT Maximum temperature difference between the flow water and the return water in the boiler

3.2.3 Sensor specifications

- **Outside temperature sensor specifications**

Tab.11 Outside temperature sensor

Temperature	°C	-20	-16	-12	-8	-4	0	4	8	12	16	20	24
Resistance	Ω (Ohm)	2392	2088	1811	1562	1342	1149	984	842	720	616	528	454

■ Boiler sensor, return sensor

Tab.12 Boiler sensor, return sensor

Temperature in °C	-20	-10	0	10	20	25	30	40	50	60	70	80	90	100	110
Resistance in Ω	98932	58879	36129	22804	14773	10000	9804	6652	4607	3252	2337	1707	1266	952	726

■ Circuit flow sensor, domestic hot water sensor and system sensor

Tab.13 Circuit flow sensor, domestic hot water sensor and system sensor

Temperature in °C	0	10	20	25	30	40	50	60	70	80	90
Resistance in Ω	32014	19691	12474	10000	8080	5372	3661	2535	1794	1290	941

■ Specifications of the boiler flue gas sensor

Tab.14 Boiler flue gas sensor

Temperature	°C	0	10	20	30	40	50	60	70	80	90	100
Resistance	Ohm	66000	40000	20000	16100	10600	7160	4940	3480	2490	1810	1340

3.3 Dimensions and connections

Fig.5

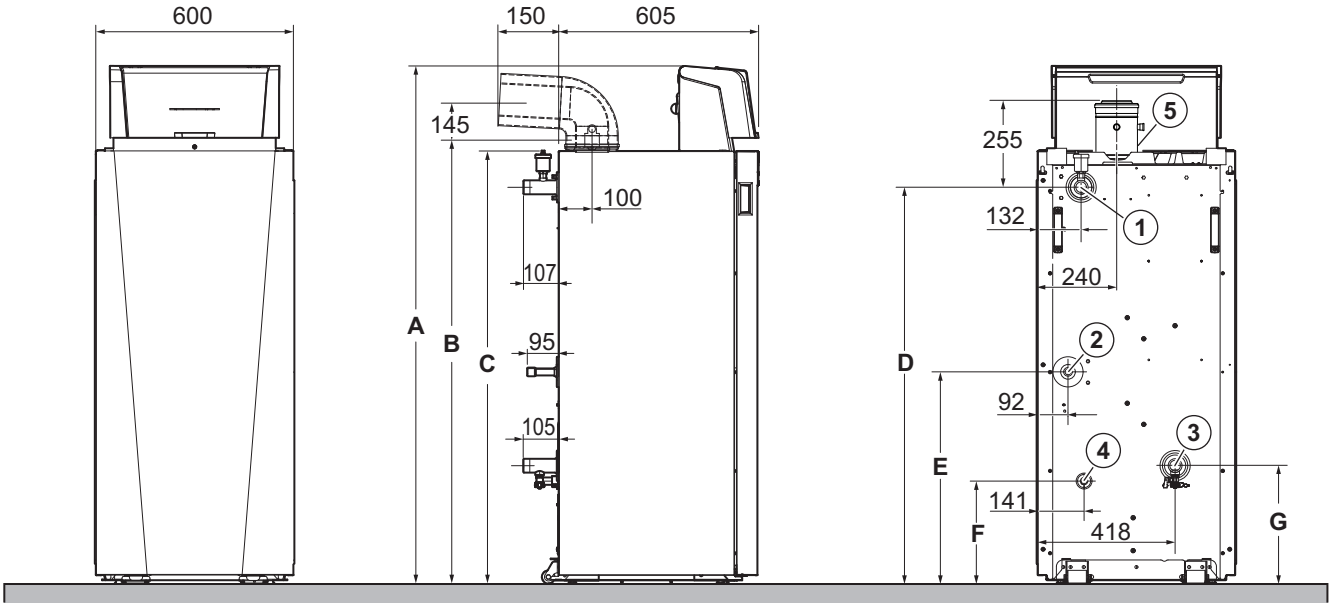

1 Heating circuit flow (R1"1/4)
2 Gas inlet (G3/4")
3 Heating circuit return (R1"1/4)
4 Condensate discharge (DN22)
5 Flue gas pipe

Tab.15

	Gas 120 ACE - 65	Gas 120 ACE - 90	Gas 120 ACE - 115
5	Diameter 100/150 mm	Diameter 100/150 mm	Diameter 100/150 mm
A (mm)	1340	1562	1562
B (mm)	1164	1386	1386
C (mm)	1082	1304	1304
D (mm)	971	1193	1193

	Gas 120 ACE - 65	Gas 120 ACE - 90	Gas 120 ACE - 115
E (mm)	410	632	632
F (mm)	87	303	303
G (mm)	128	350	350

3.4 Electrical diagram

3.4.1 Electrical diagram of boiler

Fig.6

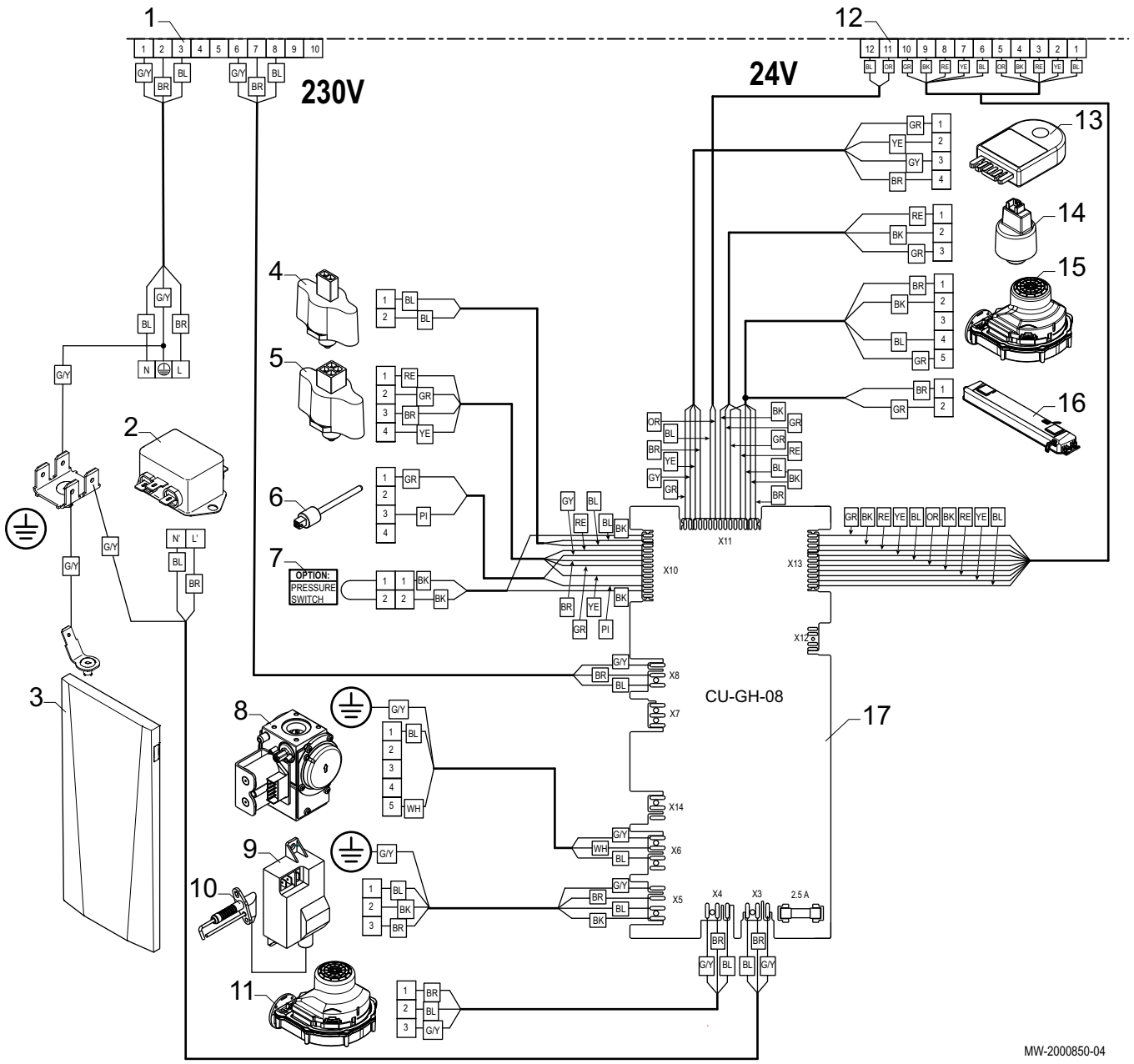

1 230 V connector, connection with control unit
2 Mains interference filter
3 Earthing of boiler front door
4 Return sensor (TR)
5 Flow sensor (FTS)
6 Flue gas sensor
7 Flue gas pressure switch (specific option for the Netherlands)
8 Gas valve unit (GB)
9 Igniter (IT)
10 Ionization/ignition electrode (E)
11 Fan supply
12 24 V connector, connection with control unit
13 Storage information (CSU)
14 Pressure sensor (PS)
15 Fan control (PWM)
16 Light
17 Control unit (CU-GH08)
BK Black
BL Blue

BR	Brown
G/Y	Green/Yellow
YE	Yellow
OR	Orange
GR	Green
PI	Pink
GY	Grey
RD	Red
WH	White

4 Description of the product

4.1 General description

Gas 120 ACE floor-standing condensing gas boilers have the following characteristics:

- Low polluting emissions
- High-efficiency heating
- Electronic control panel
- Flue gas discharge by a forced flue or chimney type connection with bi-flow option

The boilers are perfectly suited to cascade installation.

4.2 Operating principle

4.2.1 Gas/air setting

The casing fitted to the boiler is also used as an air box. Air is drawn in by the fan and gas injected into the Venturi by the fan intake. The fan speed is modulated according to the settings, the heat demand and the actual temperatures measured by the temperature sensors. The gas and air are mixed in the Venturi. The gas/air ratio command function accurately adjusts the quantities of gas and air required. This provides optimum combustion over the entire output range. The gas/air mixture is sent to the burner, located upstream of the heat exchanger.

4.2.2 Settings and safety devices

Important
The settings and safety devices are only operational if the boiler is powered up.

Tab.16 Description of the safety devices

Device	Description
NTC flue gas sensor	The control panel blocks the gas supply to the burner in the event of overheating.
Flame detector by ionisation	The boiler is put into safety lock-down in the event of gas shortage or incomplete cross-lighting on the burner.
Hydraulic pressure switch	When the pressure switch detects a pressure lower than 0.8 bar (0.08 MPa), a warning message is displayed, without stopping the circulating pump.
Post-circulating pump	After the burner stops, depending on the room thermostat setting and if in heating mode, the circulating pump runs for a further 3 minutes.
Frost protection device	When the flow temperature is lower than 5 °C, the burner starts up and runs until the flow temperature reaches 15 °C. This device runs under the following conditions: • The boiler is switched on • The gas supply is working • The pressure in the system is higher than 0.5 bar (0.05 MPa)
Anti-blocking of the pump	If there are no heating or domestic hot water requirements for 24 consecutive hours, the pumps start up automatically and run for 10 seconds.
Anticipatory start-up of the circulating pumps	In heating mode only, the appliance can start up the circulating pumps before burner ignition. The duration and activation of anticipatory start-up depends on the installation requirements and the operating temperatures. The duration of anticipatory start-up of the circulating pumps therefore varies from a few seconds to several minutes.

4.3 Main boiler components

Fig.7

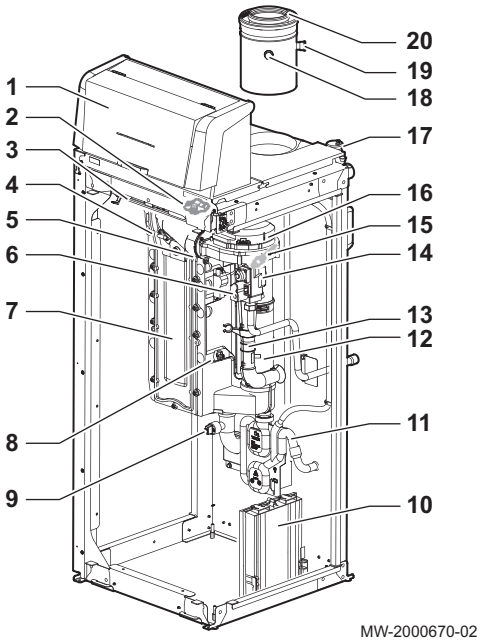

1 Control unit
2 Flow sensor
3 Light
4 Ignition/ionization electrode
5 Non-return valve
6 Gas valve
7 Heat exchanger (heating circuit)
8 Return sensor
9 Pressure gauge sensor
10 CU-GH-08 PCB housing
11 Siphon
12 Flue gas circuit
13 Intake silencer
14 Venturi
15 Flue gas sensor
16 Fan
17 Automatic air vent
18 Flue gas measuring point
19 Combustion air measuring point
20 Flue gas outlet/air supply

4.4 PCBs

4.4.1 Description of the CU-GH-08 PCB

This PCB controls the core boiler components: sensors, actuators and gas valve.

This PCB is factory-fitted and fully cabled, and does not require any operation.

The sensors, valves, circulating pumps, etc. are connected at the control unit.

4.5 Standard delivery

The Gas 120 ACE boiler comes in 2 packages including:

Tab.17 Package contents

Package	Content
Package 1	• A floor-standing gas boiler • A flue system outlet with a measuring point (stored in the boiler) • An outdoor temperature sensor • A data plate • An installation and service manual
Package 2	• A control unit • Two control unit mounting bolts on the boiler • A user manual

4.6 Accessories & options

A detailed list of accessories and options can be found in our catalogue.

5 Installation

5.1 Installation regulations

Caution
Installation of the boiler must be done by a qualified professional in accordance with prevailing local and national regulations.

Caution
A disconnection device must be fitted to the permanent pipes in accordance with the installation rules.

Caution
Respect the maximum water inlet pressure to ensure correct operation of the appliance, referring to the Technical Specifications chapter.

5.2 Choice of the location

Decide on the ideal position for installation, bearing in mind any legal directives and the space required by the appliance.

- Install the boiler on a solid, stable structure capable of bearing the weight of the appliance when full of water and fully equipped.
- When choosing the position for installation of the boiler, bear in mind the positions authorised for the combustion gas discharge outlets and the air intake vent.
- Do not install the boiler near any heat sources.

5.2.1 Data plate

Fig.8

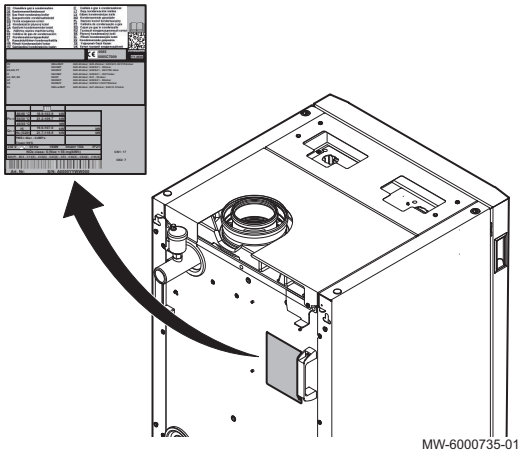

The data plate is located on the back of the boiler.

The data plate provides important information regarding the appliance:

- Serial number
- Model
- Gas category
- CN1/CN2
- etc.

Once installation is complete, the second data plate supplied in the documentation bag can be affixed to a more visible part of the boiler.

If the boiler is equipped with a hydraulic kit (low-loss header or plate heat exchanger), affix the data plate to the side of the boiler.

5.2.2 Space required - Boiler ventilation

Decide on the ideal position for installation, bearing in mind any legal directives and the space required by the appliance.

- Install the boiler on a solid, stable structure capable of bearing the weight of the appliance when full of water and fully equipped.
- When choosing the position for installation of the boiler, bear in mind the positions authorised for the combustion gas discharge outlets and the air intake vent.
- Do not install the boiler near any heat sources.

Fig.9

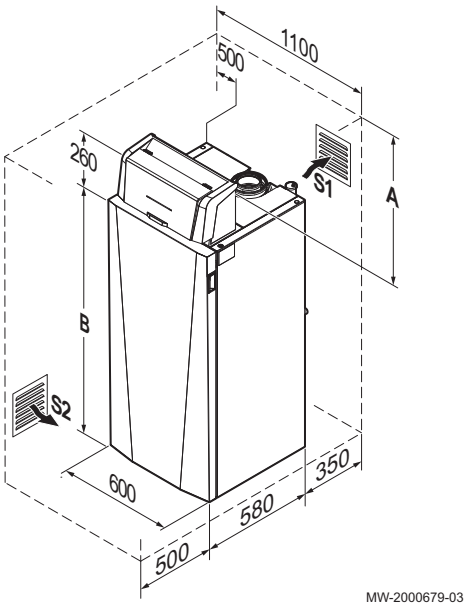

- Keep the boiler accessible at all times.
- Place the boiler on a base to make it easier to clean the room.
- The boiler can be located along a partition on one of its sides, provided there is a 500 mm space on the opposite side.
- Allow enough space around the boiler to facilitate accessibility and maintenance. The minimum recommended dimensions are shown in the illustration.
- Make sure there is a connection to the water drainage system close to the boiler to discharge any condensates.

Important
To fit the boiler, position the pallet with the package 2.5 m in front of the desired location for the installation. This distance is required to allow the boiler to be removed from its pallet.

Tab.18

	Gas 120 ACE - 65	Gas 120 ACE - 90	Gas 120 ACE - 115
A (mm)	500	500	500
B (mm)	1082	1304	1304

To allow the intake of combustion air, sufficient ventilation must be provided in the boiler room, the cross section and position of which must satisfy the regulations in force.

Great Britain	BS 5440 Part 1 and Part 2: • For boilers with a nominal output of more than 70 kW: Upper and lower air vents compulsory BS 6644 and IGEM/UP-10

Caution
- Avoid any low points in the flue gas and condensate discharge circuit in order to prevent any accumulation of condensates.
- Do not block the air inlets in the room or the combustion product evacuation or condensation water flow pipes (even partially).

If the boiler is installed in closed premises, respect the minimum dimensions given in the diagram below. Also allow for openings to obviate the following hazards:

- Accumulation of gas
- Overheating of the premises
- Great Britain: Minimum cross section of openings: see BS 5440 Part 1 and Part 2, and BS 6644.

5.2.3 Ventilation

To allow the intake of combustion air, sufficient ventilation must be provided in the boiler room, for which the cross section and position must satisfy the regulations in force in the country in which the boiler is installed:

Great Britain	BS 5440 Part 1 and Part 2: • For boilers with a nominal output of more than 70 kW: Upper and lower air vents compulsory BS 6644 and IGEM/UP-10

If the boiler is installed in closed premises, respect the minimum dimensions given in the diagram below. Also allow for openings to obviate the following hazards:

- Accumulation of gas
- Overheating of the premises
- **Great Britain**: Minimum cross section of openings: see BS 5440 Part 1 and Part 2, and BS 6644.

5.2.4 Fitting the outdoor sensor

Fig.10

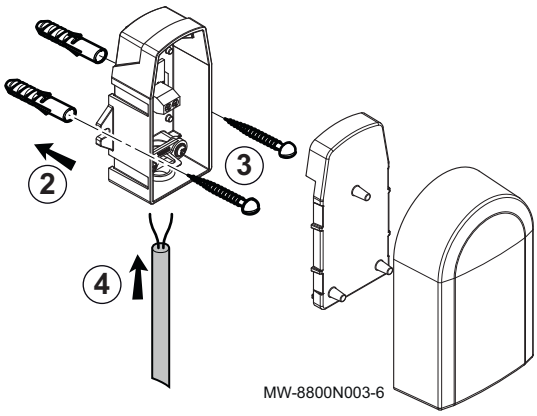

Plugs diameter 4 mm/drill diameter 6 mm

1. Choose a recommended location for the outdoor sensor.
2. Put the 2 plugs in place, delivered with the sensor.
3. Secure the sensor using the screws provided (diameter 4 mm).
4. Connect the cable to the outdoor temperature sensor.

■ Recommended positions

Place the outside sensor in a position that covers the following characteristics:

- On a façade of the area to be heated, on the north if possible.
- Half way up the wall of the area to be heated.
- Under the influence of changes in the weather.
- Protected from direct sunlight.
- Easy to access.

Fig.11

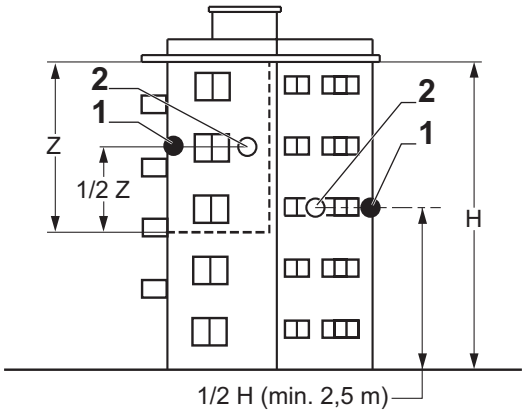

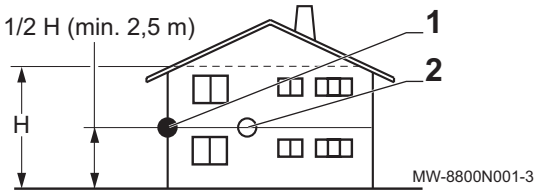

1 Optimum location
2 Possible position

H Inhabited height controlled by the sensor
Z Inhabited area controlled by the sensor

■ Positions to be avoided

Avoid placing the outside sensor in a position with the following characteristics:

- Masked by part of the building (balcony, roof, etc.).
- Close to a disruptive heat source (sun, chimney, ventilation grid, etc.).

Fig.12

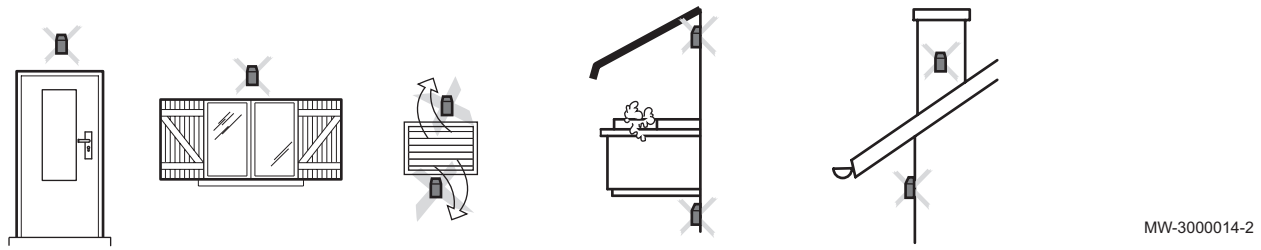

5.3 Transport

- Transport the boiler pallet with a manual or electric pallet truck.

5.4 Unpacking and preparing the boiler

Caution

- Wear gloves to handle the boiler.
- Transport the boiler pallet with a manual or electric pallet truck.
- Use carrying bars (not provided) to move the boiler.

Important
To fit the boiler, position the pallet with the package 2.5 m in front of the desired location for the installation. This distance is required to allow the boiler to be removed from its pallet.

Fig.13

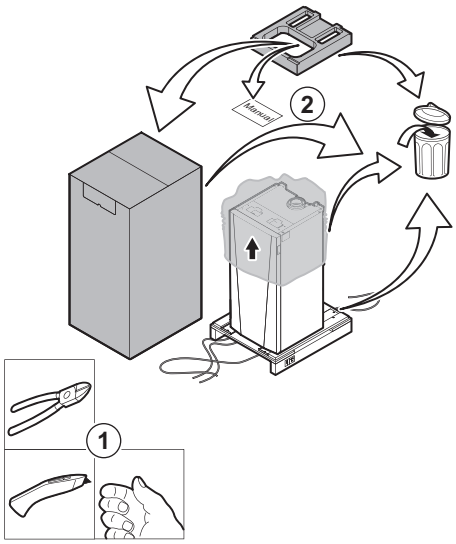

1. Cut the packaging.
2. Remove the packaging from the boiler but leave the boiler on the shipping pallet.

Important
The documentation bag (user manual + accessories) is contained in the protective block.

Fig.14

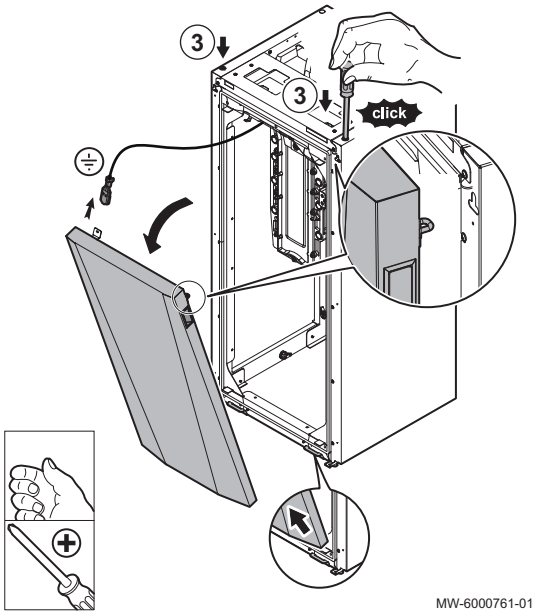

3. Using a long tool, unlock and remove the boiler's front door. Disconnect the earth wire.

Fig.15

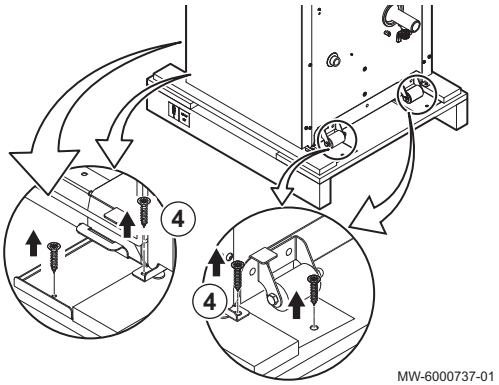

4. Remove the mounting bolts from the unloading ramps and the boiler (4 bolts at the rear and 4 bolts at the front).

Fig.16

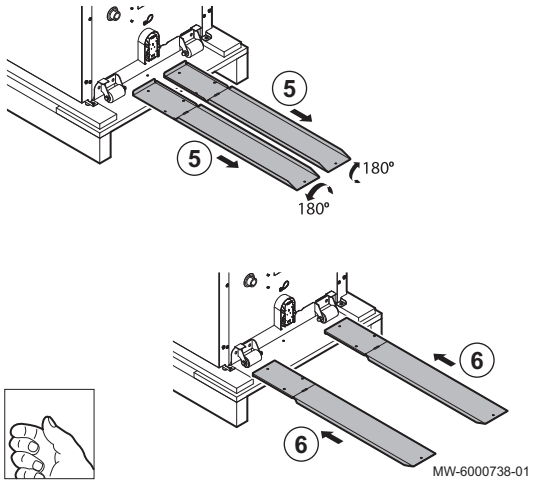

5. Pull out the unloading ramps and turn them over.
6. Align the ramps with the rear castor wheels on the boiler.

Fig.17

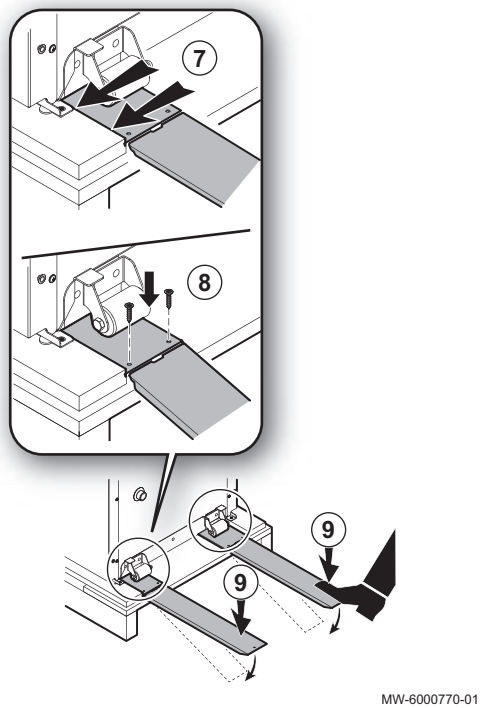

7. Lock the ramps correctly onto the pallet.
8. Screw the unloading ramps onto the pallet.
9. Fold down the ends of the ramp so that they rest on the ground.

Fig.18

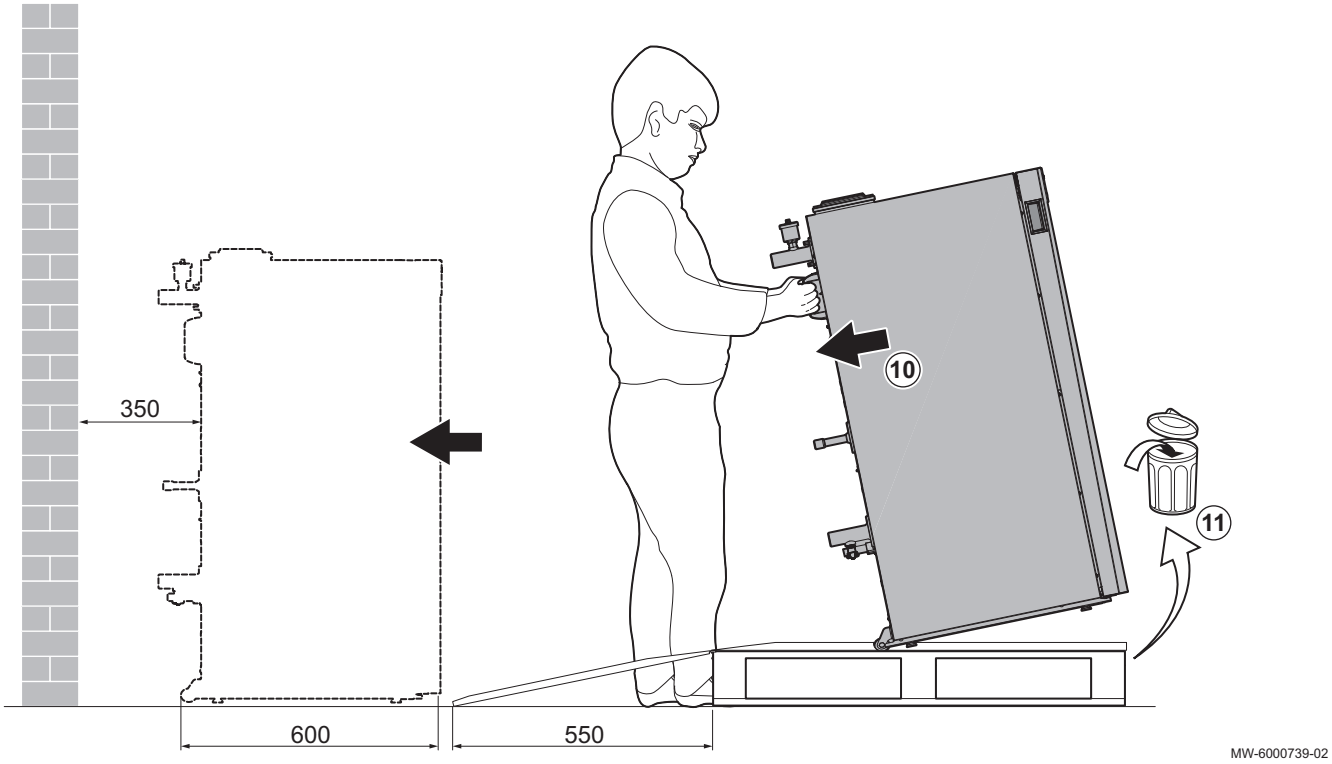

10. Tilt the boiler backwards until it is resting on the castor wheels, then remove it from the pallet.
11. Recycle the pallet.

Fig.19

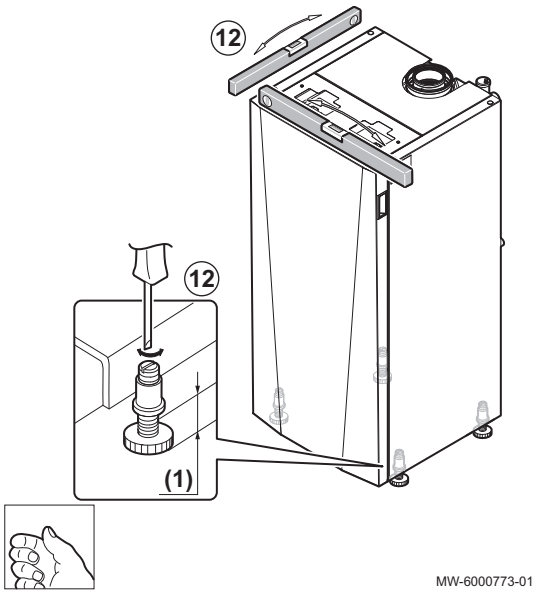

12. Level the boiler using the adjustable feet.

    (1) Factory setting: 30 mm, adjustment range: 20 to 40 mm

Caution
The rear castor wheels must no longer be in contact with the ground.

5.5 Hydraulic connections

5.5.1 Water treatment

In many cases, the boiler and the heating system can be filled with mains water, without treating the water.

Caution
Do not add any chemical products to the heating water without first consulting a water treatment specialist. For example: antifreeze, water softeners, products to increase or reduce the pH value, chemical additives and/or inhibitors. These may cause faults in the boiler and damage the heat exchanger.

Important
- Flush the installation with at least 3 times the volume of water contained in the heating system.
- Flush the DHW circuit with at least 20 times its volume of water.

The water in the installation must comply with following specifications:

Tab.19 Installation water specifications

		Initial commissioning	Concentration (top up)
Degree of acidity (untreated water)	pH	6.5 - 8.5	6.5 - 8.5
Degree of acidity (treated water)	pH	7.0 - 9.0	7.0 - 9.0
Conductivity at 25°C	µS/cm	≤ 500	≤ 500
Chlorides	mg/litre	≤ 50	≤ 50
Other components	mg/litre	< 1	< 1
Total water hardness	°f	5 - 35	≤ 15
	°dH	2.8 - 20.0	≤ 8.5
	mmol/litre(1)	0.5 - 3.5	< 1.5
(1) Flow temperature less than 90°C — Maximum hardness: 1.50 mmol/l			

Important
If water treatment proves necessary, Remeha recommends the following manufacturers:

- Cillit
- Climalife
- Fernox
- Permo
- Sentinel

5.5.2 Flushing new installations and installations less than 6 months old

Before filling the heating installation, it is essential to remove any debris (copper, caulking, soldering flux) from the installation.

1. Clean the installation with a powerful universal cleaner.
2. Flush the installation with at least 3 times the volume of water contained in the central heating system (until the water runs clear and shows no impurities).

5.5.3 Flushing an existing installation

Before filling the heating installation, it is essential to remove any sludge deposits which have accumulated in the heating circuit over the years.

1. Remove any sludge from the installation.
2. Flush the installation with at least 3 times the volume of water contained in the central heating system (until the water runs clear and shows no impurities).

5.5.4 Connecting the heating circuit

Important
Abide by the information shown in the hydraulic diagrams.

The pipes are not provided.

Caution

- The heating pipe must be mounted in accordance with the provisions applicable.
- If installing stop valves, position the fill/drain valve and the expansion vessel between the stop valves and the boiler.
- Always install a safety valve calibrated to a maximum of 4 bar on the heating circuit. The safety valve can be connected to a venting pot. The safety valve must not be used to drain the heating circuit.
- It is recommended to install a sludge collector on all installations.

See
If fitting with a hydraulic kit (low-loss header or plate heat exchanger), refer to the kit manual.

5.5.5 Connecting the condensate discharge pipe

Use a neutralisation station to achieve a pH value of more than 6.5 (in accordance with prevailing regulations).

Discharge the condensates directly into the mains drainage system via a siphon. In view of the acidity level (pH 2.5 to 3), only condensate discharge pipes made from compatible plastic should be used.

Fig.20

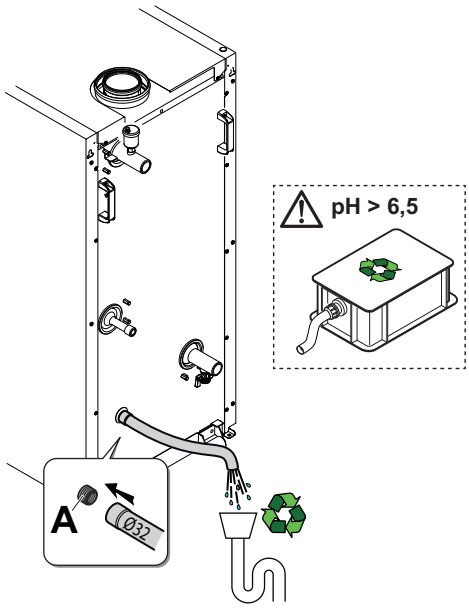

MW-2000825-01

The condensate discharge pipe is located at the rear of the boiler.

- Do not block the condensate discharge pipe.
- Tilt the discharge pipe by at least 30 mm per metre and make sure there are no low points that could cause the accumulation of water or deposits. Maximum horizontal length 5 metres.
- Do not drain condensation water into a roof gutter.
- Connect the condensate discharge pipe in accordance with prevailing standards.
- It is preferable to use the condensate neutralisers recommended by the manufacturer of the boiler.

1. Connect a plastic hose to the condensate discharge outlet (DN 22).
2. Insert the other end of the hose into a waste water discharge outlet.

5.5.6 Filling the siphon

Fig.21

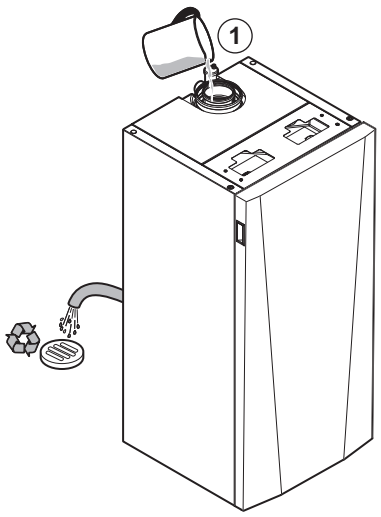

MW-6000742-02

Danger
If operating with the siphon empty, combustion products will escape into the premises in which the boiler is installed.

1. Pour water into the flue gas pipe (central pipe) until it flows out of the condensate discharge pipe.

5.6 Gas connection

Danger

- Close the main gas valve before starting work on the gas pipes.
- The diameters of the pipes must be defined in accordance with the standards in force in your country.
- Connect the gas pipe in accordance with prevailing standards and regulations.
- Ensure that there is no dust in the gas pipe.

The gas pipes are not provided.

In old gas networks, we recommend fitting a gas filter with a low pressure drop upstream of this point.

1. Clean the gas supply pipe.
2. Remove the anti-dust plug located on the boiler's gas inlet.
3. Mount a gas stop valve (not provided) on the boiler's gas inlet.
4. Connect the gas inlet pipe to the gas stop valve.

5. Close the gas supply valve before testing the pressure on the gas supply pipe to avoid damage caused by excessive pressure on the gas regulator. Decompress before reopening the valve.

5.6.1 Gas supply

- Before mounting, check that the gas meter has sufficient capacity (in m^3/h). To do this, you should bear in mind the consumption of all appliances. If the capacity of the gas meter is too low, inform the gas supply company.
- The boilers are preset to run on G20 gas (gas H) and can be adapted to run with the following gases:
  - G31 (gas P),
  - G30/31 (gas B/P)

Important
To use a different type of gas, contact an approved assistance service.

5.7 Air supply/flue gas outlet connections

5.7.1 Classification

The discharge and intake pipes must be certified for the appropriate configuration and must meet the requirements of the prevailing installation standards in the country.

Tab.20 Configurations and recommendations for the flue system

Configuration	Principle	Description
B_{23} B_{23P}	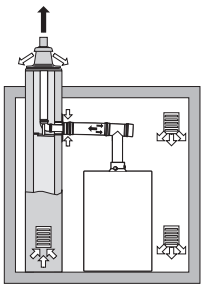 AD-3001055-01	• Connection to a chimney using a CE connection kit (single pipe in a flue, combustion air taken from the boiler room). • Follow the connection instructions and adhere to the recommended maximum pipe lengths. • Comply with the applicable regulations governing ventilation and cross-sections for room aeration vents.
B_{33}	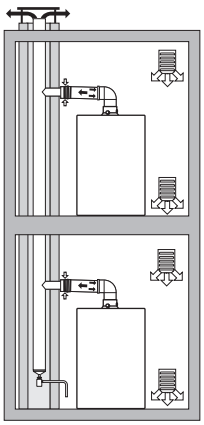 MW-5000925-1	Room-ventilated version • Without down-draught diverter. • Joint flue gas discharge via the roof, with guaranteed natural draft (at all times underpressure in the joint discharge duct). • Flue gas discharge rinsed with air, air from the installation area (special construction). • The IP rating of the boiler is lowered to IP20.
C_{13} C_{13X}	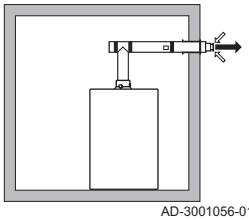 AD-3001056-01	• Air/flue gas connection using concentric pipes to a horizontal terminal (so-called forced flue). Use of CE-certified system. • This allows the air required for combustion to be drawn in and the combustion products to be discharged at the same time. • The terminal parts of the double discharge pipe must fit inside a 2500 cm2 square for boilers under 70 kW and a 10,000 cm2 square for boilers over 70 kW.

Configuration	Principle	Description
C_{33} C_{33X}	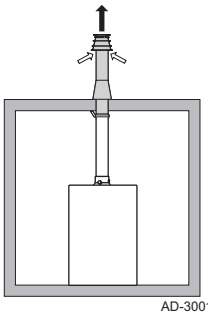 AD-3001057-01	• Air/flue gas connection using concentric pipes to a vertical terminal (roof outlet). Use of CE-certified system. • This allows the air required for combustion to be drawn in and the combustion products to be discharged at the same time. • The terminal parts of the double discharge pipe must fit inside a 2500 cm2 square for boilers under 70 kW and a 10,000 cm2 square for boilers over 70 kW.
C_{43} C43X	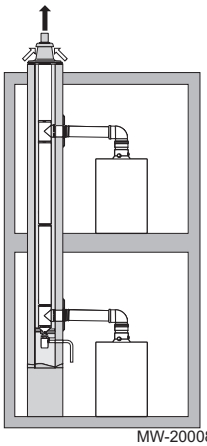 MW-2000822-01	• Air/flue gas connection via concentric pipes to a common pipe supplying several heating applications. • The common pipe has a roof connection to a vertical terminal that draws in the air required for combustion and discharges the combustion products. • Use of CE-certified system.
C_{53}	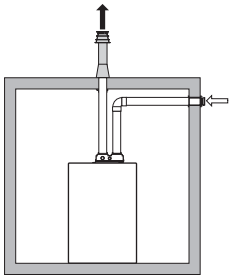 AD-3001058-02	• Air/flue gas connection via separate pipes lead to two separate terminals. One draws in the air required for combustion and the other discharges the combustion products. • The outlets may be in different pressure zones. • Do not install the air supply and discharge on opposing surfaces. • Use of CE-certified system.
C_{63} C_{63X}		The installer is responsible for installing a CE-certified discharge system that complies with the manufacturer's recommendations (temperature, flow, pressure, etc.). • The maximum pressure drop in the pipes ΔP must not exceed the values given in the table below. The pipes must be certified for this type of use and for a temperature of more than 100 °C. The terminal part of the flue gas pipe must be certified as complying with the EN 1856-1 Standard. • If installing discharge and intake pipes not supplied by Remeha, these must be certified for the intended type of use and their maximum pressure drop must be compliant.

Configuration	Principle	Description
C_{83} C_{83X}	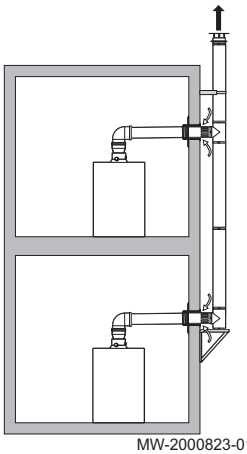 MW-2000823-01	• Flue gas connection to a collective flue for sealed boilers. The air supply is individual via a terminal coming from outside the building. • A concentric pipe can be used to both supply the boiler with combustion air and connect to the collective flue gas discharge system. • The chimney or flue gas pipe must be suitable for such use and the system CE certified.
C_{93} C_{93X}	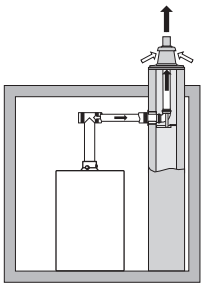 AD-3001059-01	Air/flue gas connection via concentric pipes in an existing chimney. The air supply in the chimney may be installed via the existing channel or via tubing. Flue gas discharge and air intake are via a vertical terminal at the top of the chimney. • The air intake and discharge must be close enough to be in the same pressure zone. • The minimum cross-sections are shown in the table below. • The flue system must be suitable for the intended use and the system CE certified.

Tab.21 Minimum dimensions of the duct or pipe C_{93}, C_{93X}

Version (D)	Without air supply		With air supply	
Rigid 80 mm	Ø 130 mm	□ 130 x 130 mm	Ø 140 mm	□ 130 x 130 mm
Rigid 100 mm	Ø 160 mm	□ 160 x 160 mm	Ø 170 mm	□ 160 x 160 mm
Rigid 150 mm	Ø 200 mm	□ 200 x 200 mm	Ø 220 mm	□ 220 x 220 mm
Flexible 80 mm	Ø 130 mm	□ 130 x 130 mm	Ø 145 mm	□ 130 x 130 mm
Flexible 100 mm	Ø 160 mm	□ 160 x 160 mm	Ø 170 mm	□ 160 x 160 mm
Flexible 150 mm	Ø 200 mm	□ 200 x 200 mm	Ø 220 mm	□ 220 x 220 mm
Concentric 80/125 mm	Ø 145 mm	□ 145 x 145 mm	Ø 145 mm	□ 145 x 145 mm
Concentric 100/150 mm	Ø 170 mm	□ 170 x 170 mm	Ø 170 mm	□ 170 x 170 mm
Concentric 150/200 mm	Ø 270 mm	□ 270 x 270 mm	-	-

Fig.22 Minimum dimensions of the duct or pipe C_{93}, C_{93X}

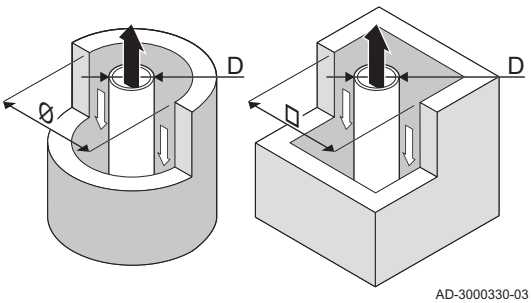

Important
The duct must comply with the air density requirements of the local regulations.

Important
- Only original components are authorised for connection to the boiler and for the terminal.
- The clear section must comply with the standard.
- The chimney must be swept before installing the discharge flue.

Caution
Ensure that the flue gas discharge pipes are securely attached to the wall with suitable retaining flanges to prevent any damage and guarantee the tightness of every gasket in the circuit.

Caution
The minimum gradient of the condensates discharge pipe from the boiler to the waste water discharge must be 1 cm per linear metre.

5.7.2 Lengths of the air/flue gas pipes

The maximum lengths (Lmax) given in the table are valid for pipes in which the horizontal sections do not exceed one metre in total. For each additional metre of horizontal pipe, a multiplication coefficient of 1.2 must be applied when calculating the total length L. The total length L is calculated by adding the lengths of the straight air/flue gas pipes and the equivalent lengths of the other components.

Always ensure that **L** is less than **Lmax**.

Important
For the list of flue gas system accessories and the equivalent lengths, refer to the current price list.

Tab.22 Lengths of the air/flue gas pipes in metres

Configuration	Description	Materials	Diameter	Gas 120 ACE - 65	Gas 120 ACE - 90	Gas 120 ACE - 115
B_{23} B_{23P}	Single **rigid** chimney pipes (combustion air taken from the premises)	PPS	80 mm	-	-	-
B_{23} B_{23P}	Single **rigid** chimney pipes (combustion air taken from the premises)	PPS	100 mm	26	24	19
B_{23} B_{23P}	Single **rigid** chimney pipes (combustion air taken from the premises)	PPS	110 mm	40	40	40
B_{23} B_{23P}	Single **flexible** chimney pipes (combustion air taken from the premises)	PPS	80 mm	-	-	-
B_{23} B_{23P}	Single **flexible** chimney pipes (combustion air taken from the premises)	PPS	110 mm	29.5	24	17.5
C_{13} C_{13X}	Concentric **rigid** pipes connected to a horizontal terminal	PPS/Aluminium	80/125 mm	-	-	-
C_{13} C_{13X}	Concentric **rigid** pipes connected to a horizontal terminal	PPS/Aluminium	100/150 mm	9	8	5.9
C_{33} C_{33X}	Concentric **rigid** pipes connected to a vertical terminal	PPS/Aluminium	80/125 mm	-	-	-
C_{33} C_{33X}	Concentric **rigid** pipes connected to a vertical terminal	PPS/Aluminium	100/150 mm	11.5	10	9.4
C_{53}	Bi-flow adapter and separate single **rigid** air/flue gas pipes (combustion air taken from outside)	PPS/Aluminium	80/125 mm over 2x80 mm	-	-	-
C_{53}	Bi-flow adapter and separate single **rigid** air/flue gas pipes (combustion air taken from outside)	PPS/Aluminium	100/150 mm over 2x100 mm	23	17.5	Air: 11 Flue gases: 5
C_{93} C_{93X}	• Concentric pipes in the boiler room • Single **rigid** pipes in the chimney (combustion air in counter-current)	PPS/Aluminium	80/125 mm 80 mm	-	-	-
C_{93} C_{93X}	• Concentric pipes in the boiler room • Single **rigid** pipes in the chimney (combustion air in counter-current)	PPS/Aluminium	80/125 mm 110 mm	-	-	-
C_{93} C_{93X}	• Concentric pipes in the boiler room • Single **rigid** pipes in the chimney (combustion air in counter-current)	PPS/Aluminium	110/150 mm 110 mm	16	13.2	10

Configuration	Description	Materials	Diameter	Gas 120 ACE - 65	Gas 120 ACE - 90	Gas 120 ACE - 115
C_{93} C_{93X}	• Concentric pipes in the boiler room • Single **flexible** pipes in the chimney (combustion air in counter-current)	PPS	80/125 mm 80 mm	-	-	-
C_{93} C_{93X}	• Concentric pipes in the boiler room • Single **flexible** pipes in the chimney (combustion air in counter-current)	PPS	110/150 mm 110 mm	16.5	13.5	9.4

Tab.23 PPS pipe reduction for each element used

Diameter	80 mm Single	80/125 mm Concentric	100 mm Single	100/150 mm Concentric
45° elbow	1.2 m	1.0 m	1.1 m	1.0 m
87° elbow	1.9 m	1.5 m	2.0 m	3.7 m
Straight inspection tube	0.3 m	0.6 m	-	1.0 m
87° inspection elbow	1.9 m	2.0 m	4.8 m	-
Inspection T	4.2 m	2.7 m	5.6 m	2.5 m
Inspection tube for flexible pipe	0.3 m	-	0.5 m	-

5.7.3 Dimensions of flue gas outlet pipe

Warning
The pipes connected to the flue gas adapter must satisfy the following dimension requirements.

Fig.23 Dimensions of open connection

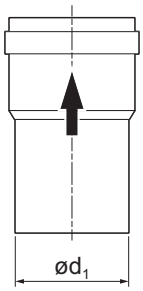

AD-3001094-01

d_1 External dimensions of flue gas outlet pipe

Tab.24 Dimensions of pipe

	d_1 (min-max)
80 mm	79.3 - 80.3 mm
100 mm	99.3 - 100.3 mm
150 mm	149 - 151 mm

Fig.24 Dimensions of parallel connection

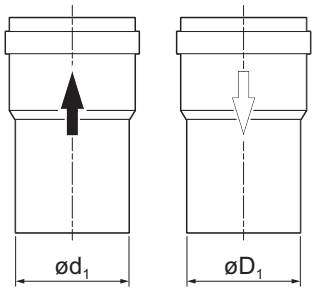

AD-3000963-01

d_1 External dimensions of flue gas outlet pipe
D_1 External dimensions of air supply pipe

Tab.25 Dimensions of pipe

	d_1 (min-max)	D_1 (min-max)
80/80 mm	79.3 - 80.3 mm	79.3 - 80.3 mm
100/100 mm	99.3 - 100.3 mm	99.3 - 100.3 mm
110/110 mm	109.3 - 110.3 mm	109.3 - 110.3 mm
150/150 mm	149 - 151 mm	149 - 151 mm

Fig.25 Dimensions of concentric connection

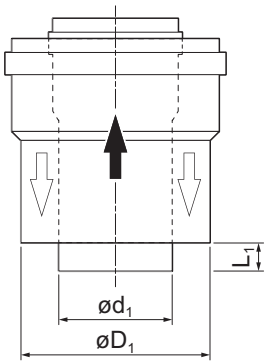

AD-3000962-01

d_1 External dimensions of flue gas outlet pipe
D_1 External dimensions of air supply pipe
L_1 Length difference between flue gas outlet pipe and air supply pipe

Tab.26 Dimensions of pipe

	d_1 (min-max)	D_1 (min-max)	L_1(1) (min-max)
80/125 mm	79.3 - 80.3 mm	124 - 125.5 mm	0 - 15 mm
100/150 mm	99.3 - 100.3 mm	149 - 151 mm	0 - 15 mm
(1) Shorten the inner pipe if the length difference is too great.			

5.7.4 Connection to the flue gas pipe

At delivery, the flue gas outlet/air supply is fixed inside the boiler.

1. Using a long tool, unlock and remove the boiler's front door.
2. Remove the boiler outlet.

Fig.26

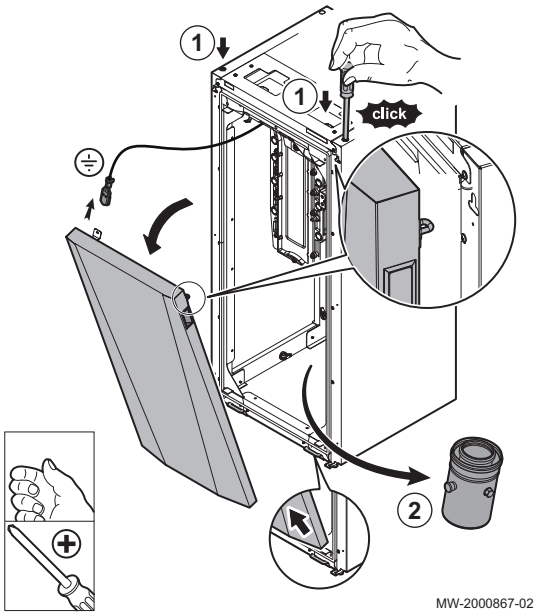

MW-2000867-02

Fig.27

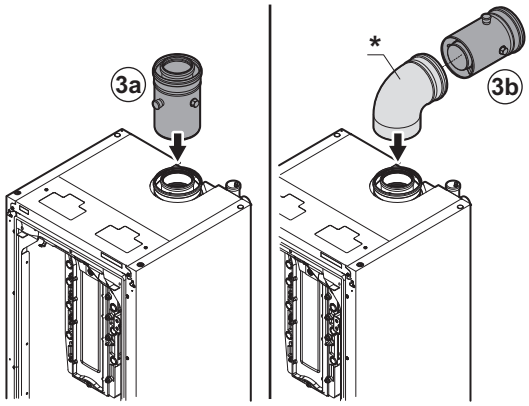

MW-2000868-01

3. Two options for connection to the flue gas pipe,

Option	Description
3a	Connection to a vertical flue gas pipe. Position the flue gas outlet/air supply directly at the boiler outlet
3b	Connection to a horizontal flue gas pipe. Insert an outlet elbow (* not supplied) before the flue gas outlet/air supply

Important
Lubricate the gaskets on the flue system during assembly.

Fig.28 Fastening the coaxial pipes using screws

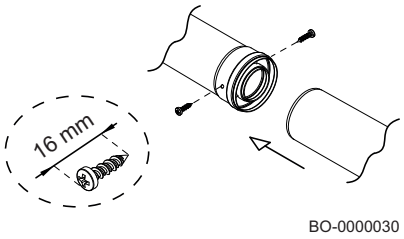

Fastening the coaxial pipes

Fasten the intake pipes with two galvanised Ø 4.2 mm screws with a maximum length of 16 mm.

Caution
Before fixing the screws, make sure that at least 4.5 cm of pipe is inserted in the gasket of the other pipe.

Warning
Guarantee a minimum pipe slope towards the boiler of at least 5 cm per metre.

6 Operation

6.1 Settings

To configure the installation and use the boiler, please refer to the control unit manual.

7 Maintenance

7.1 General

We recommend having the boiler inspected and serviced at regular intervals.

Caution
Do not neglect to service the boiler. Contact a qualified professional or take out a maintenance contract for the obligatory annual servicing of the boiler.
Failure to service the appliance voids the warranty.

Danger of electric shock
Before service work is started, the boiler has to be de-energised and secured from accidentally being switched back on.

Caution
Have an inspection carried out and the flues swept **at least once a year** or more, depending on the regulations in force in your country.

Caution
Only qualified professionals are authorised to carry out maintenance work on the boiler and the heating system.

Caution
After maintenance or repair work, check the entire heating system to ensure that there are no leaks.

Caution
Only genuine spare parts may be used.

7.2 Specific maintenance operations

7.2.1 Cleaning the siphon

Fig.29

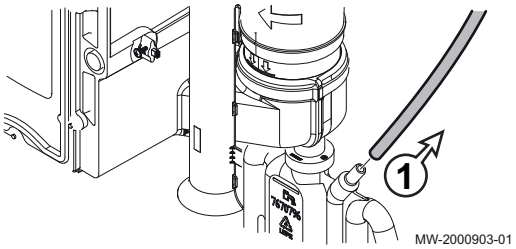

1. Remove the flue gas outlet discharge pipe.

Fig.30

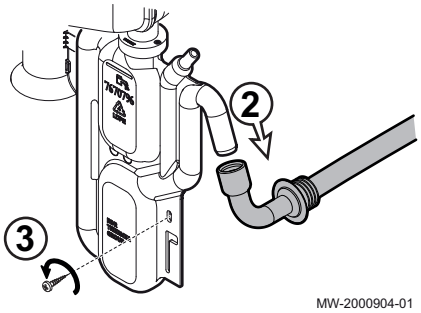

2. Remove the condensate discharge pipe.
3. Remove the screw from the siphon.

Fig.31

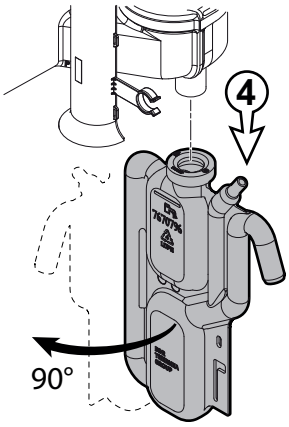

MW-2000905-01

4. Pull the siphon downwards to disengage it and pivot it to release it.

Fig.32

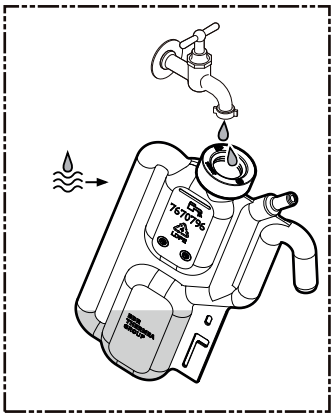

MW-2000843-01

5. Flush the siphon.
6. Drain the siphon.

Fig.33

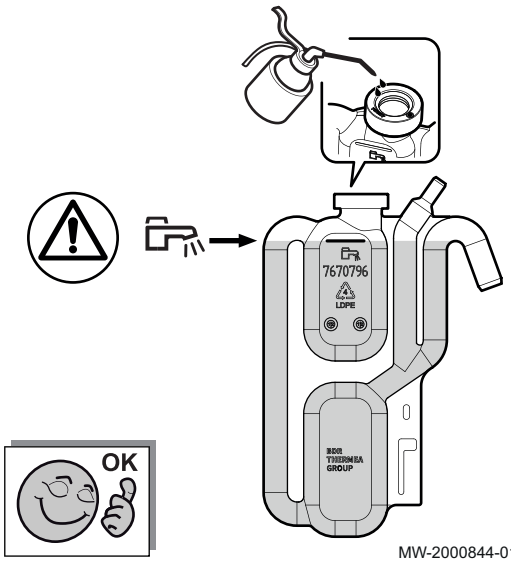

MW-2000844-01

7. Fill the siphon with clean water up to the mark.
8. Lubricate the siphon gasket.
9. Re-engage the siphon and refit the screw.
10. Refit the two pipes.

7.2.2 Checking the ionisation current

1. Check the ionisation current at full load and at low load.
   ⇨ The value is stable after 1 minute.
2. Clean or replace the ionisation/ignition electrode if the value is lower than 4 µA.

7.2.3 Replace the ionization/ignition electrode

Fig.34

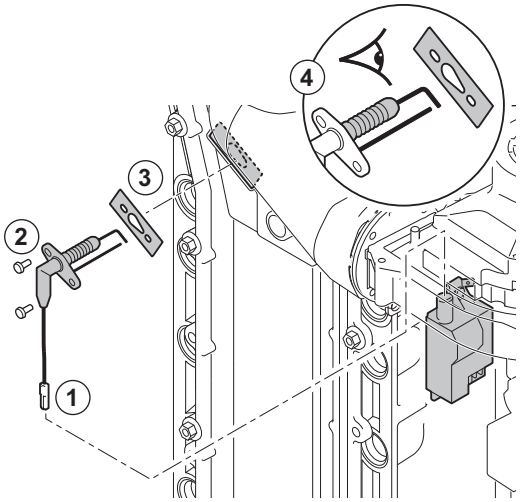

The ionization/ignition electrode must be replaced if:

- The ionization current is < 4 µA.
- The electrode is damaged or worn.

1. Remove the plug of the electrode from the igniter.

Important
The ignition cable is fixed to the electrode and therefore may not be removed.

2. Remove the two screws.
3. Remove the entire component.
4. Fit the new ionization/ignition electrode with a new seal.
5. Reassemble the unit in the reverse order to disassembly.

7.2.4 Servicing the forced flue connection pipes

1. Open the inspection hatches or remove the pipes.
2. Check that the air supply and discharge pipes are not blocked.
   ⇨ If necessary, clean the discharge pipe
3. Check the tightness of the flue gas system.
4. Replace the tightness gaskets and, if necessary, any sections of pipe until tightness is perfect.

7.2.5 Checking the burner and cleaning the heat exchanger

Fig.35 Removing the fan

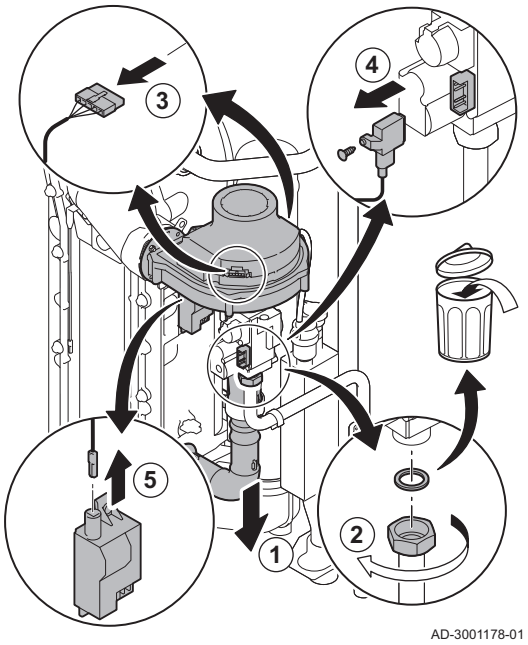

1. Remove the air inlet flue on the venturi.
2. Loosen the gland on the gas valve unit.
3. Disconnect the fan plugs (on the front and rear).
4. Remove the screwed-on plug from the gas valve unit.
5. Remove the ignition electrode plug from the ignition transformer.

Fig.36 Removing the front plate, fan and burner

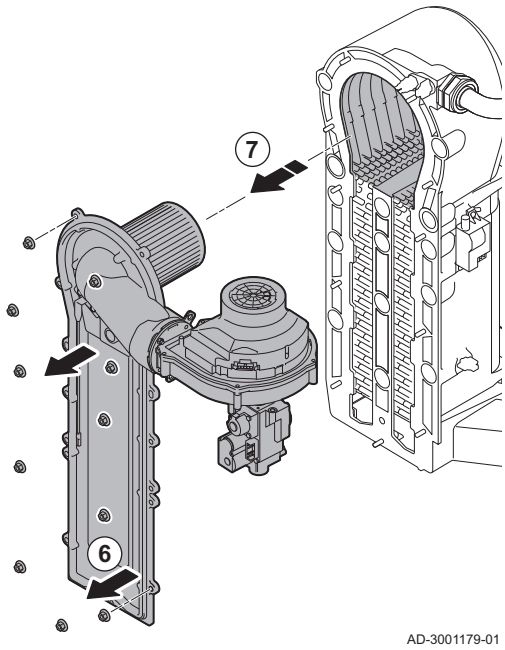

6. Remove the front plate from the heat exchanger.
7. Carefully lift the front plate, including the burner and fan, away from the heat exchanger.

Fig.37 Cleaning the heat exchanger

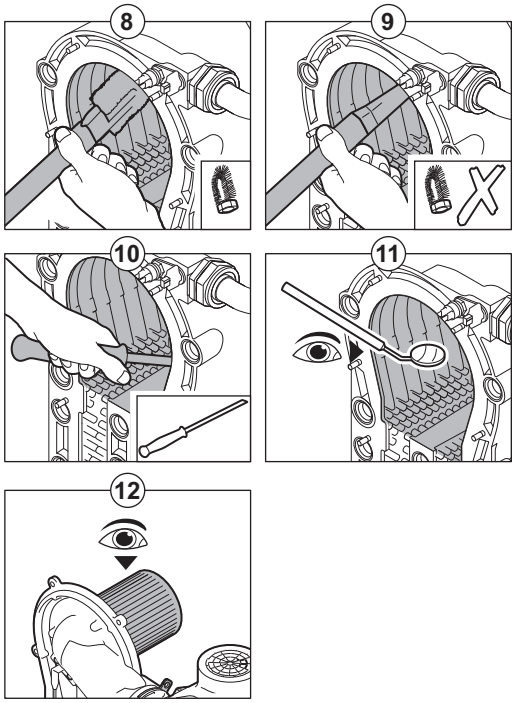

8. Use a vacuum cleaner fitted with a special endpiece (accessory) to clean the top part of the heat exchanger (combustion chamber).
9. Vacuum again without the top brush on the end piece.
10. Clean the lower section of the heat exchanger with the special cleaning blade (accessory).
11. Check (e.g. using a mirror) whether any visible contamination has been left behind. If it has, remove it with the vacuum cleaner.
12. Check that the burner cover of the dismantled burner is free from cracks and/or damage. If not, replace the burner.
    ⇨ Servicing the burner is usually not necessary, it is self-cleaning. Use compressed air to carefully blow away any dust.
13. Reassemble the unit in reverse order.

Caution
- Remember to reconnect the fan plug.
- Check that the gasket is correctly positioned between the mixing elbow and the heat exchanger (the gasket must lie absolutely flat in the appropriate groove to ensure that no gas can leak).
- Tighten the gland on the gas valve unit with a torque wrench to the firmness of 27,5 Nm.
- Tighten the front plate nuts with a torque wrench to the firmness of 10 Nm.

14. Open the gas supply and switch the power supply to the boiler back on.

Fig.38 Disconnecting the fan

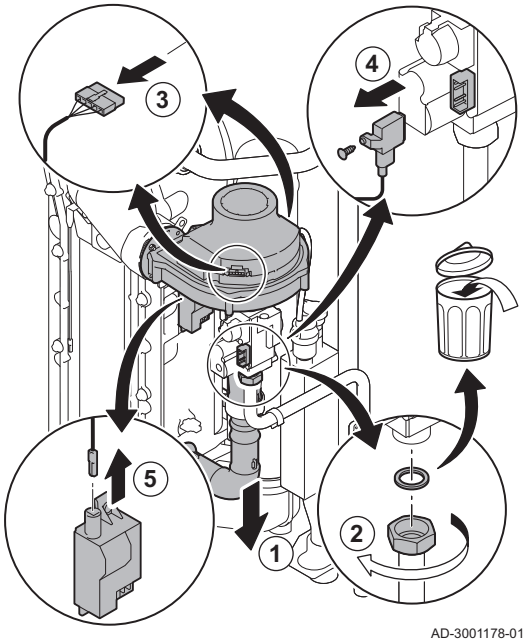

7.2.6 Checking the non-return valve

1. Remove the air inlet pipe from the venturi.
2. Unscrew the gland of the gas valve unit.
3. Disconnect the fan plugs (on the front and rear).
4. Remove the screwed-on plug from the gas valve unit.
5. Remove the ignition electrode plug from the ignition transformer.

Fig.39 Checking the non-return valve

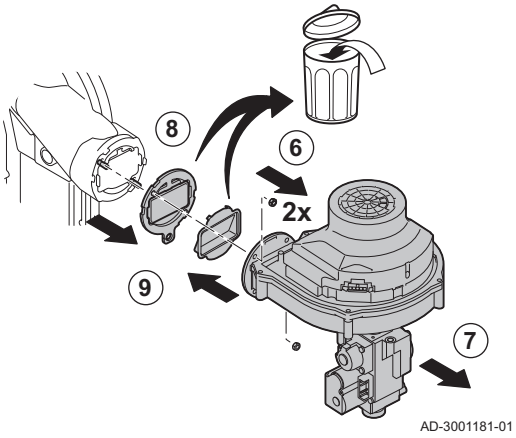

6. Dismantle the fan.
7. Remove the fan together with the gas valve unit.
8. Inspect the non-return valve and replace it in the event of a defect or damage, or if the maintenance kit contains a non-return valve.
9. Reassemble in the reverse order.

Caution
- Remember to reconnect the fan plug.
- Tighten the gland on the gas valve unit with a torque wrench to the firmness of 27,5 Nm.
- Tighten the two fan nuts with a torque wrench to the firmness of 3,8 Nm.

8 Decommissioning

8.1 Decommissioning procedure

Caution
Only qualified professionals are authorised to carry out maintenance work on the boiler and the heating system.

To switch off the boiler temporarily or permanently, proceed as follows:

1. Switch the boiler off.
2. Cut the electrical power to the boiler.
3. Close the gas valve on the boiler.
4. Drain the central heating system or ensure frost protection.
5. Close the door of the boiler to prevent air circulating inside it.
6. Remove the pipe connecting the boiler to the chimney and close the nozzle with a plug.

8.2 Recommissioning procedure

Caution
Only qualified professionals are authorised to carry out maintenance work on the boiler and the heating system.

Should it prove necessary to carry out the recommissioning of the boiler, proceed as follows:

1. Re-establish electrical power to the boiler.
2. Fit and check the flue gas pipe.
3. Fill the siphon with water.
4. Fill the central heating system.
5. Open the boiler gas valve.
6. Start up the boiler.

9 Disposal and recycling

Caution
Only qualified professionals are permitted to remove and dispose of the boiler, in accordance with local and national regulations.

Fig.40

MW-3000179-03

If you need to remove the boiler, proceed as follows:

1. Switch off the boiler.
2. Cut the power supply to the boiler.
3. Close the main gas valve.
4. Close the water mains.
5. Close the gas valve on the boiler.
6. Drain the installation.
7. Remove the air/flue gas pipes.
8. Disconnect all pipes.
9. Dismantle the boiler.

10 Environmental

10.1 Energy savings

Energy-saving advice:

- Do not block ventilation outlets.
- Do not cover the radiators. Do not hang curtains in front of the radiators.
- Install reflective panels behind the radiators to prevent heat losses.
- Insulate the pipes in rooms that are not heated (cellars and lofts).
- Close the radiators in rooms not in use.
- Do not run hot (or cold) water pointlessly.
- Install an energy-saving shower head, which can save up to 40 % energy.
- Take showers rather than baths. A bath consumes twice as much water and energy.

10.2 Room thermostat and settings

Various models of room thermostat are available. The type of thermostat used and the parameter selected impact total energy consumption.

- A modulating regulator, which may be combined with thermostatic valves, is eco-friendly in terms of energy and offers an excellent level of comfort. This combination allows you to set the temperature separately for each room. However, do not install thermostatic radiator valves in the room in which the room thermostat is located.
- Complete opening and closing of the thermostatic radiator valves causes undesirable variations in temperature. Therefore, these must be opened/closed progressively.
- Set the room thermostat to a temperature of approximately 20°C to reduce heating costs and energy consumption.
- Lower the thermostat setting to approximately 16°C at night or when you are not at home. This reduces heating costs and energy consumption.
- Lower the thermostat setting well before airing the rooms.
- Set the water temperature to a lower level in summer than in winter (e.g. 60°C and 80°C respectively) when an ON/OFF thermostat is used.
- When clock thermostats and programmable thermostats are to be set, do not forget to take any holidays and days when no one is at home into account.

11 Warranty

11.1 General

We would like to thank you for buying one of our appliances and for your trust in our product.

In order to ensure continued safe and efficient operation, we recommend that the product is regularly inspected and maintained.

Your installer and our service department can assist with this.

11.2 Terms of warranty

The following provisions do not affect the application, in favour of the buyer, of the legal provisions with regard to hidden defects that are applicable in the buyer's country.

This appliance comes with a warranty that covers all manufacturing faults; the warranty period will commence on the date of purchase stated on the installer's invoice.

The warranty period is stated in our price list.

As a manufacturer, we can by no means be held liable if the appliance is used incorrectly, is poorly maintained or not maintained at all, or is not installed correctly (it is your responsibility to ensure that installation is carried out by a qualified installer).

In particular, we cannot be held liable for material damage, intangible losses or physical injury resulting from an installation that does not comply with:

- Legal or regulatory requirements or provisions laid down by the local authorities.
- National or local regulations and special provisions relating to the installation.
- Our manuals and installation instructions, in particular in terms of regular maintenance of the appliances.

Our warranty is limited to the replacement or repair of the parts found to be defective by our technical services team, excluding labour, transfer and transport costs.

Our warranty does not cover replacement or repair costs for parts that may become defective due to normal wear, incorrect usage, the intervention of unqualified third parties, inadequate or insufficient supervision or maintenance, a mains supply that is not appropriate or the use of unsuitable or poor quality fuel.

Smaller parts, such as motors, pumps, electrical valves etc., are guaranteed only if these parts have never been dismantled.

The rights established in European Directive 99/44/EEC, implemented by legal decree No. 24 of 2 February 2002 and published in Official Journal No. 57 of 8 March 2002, remain in force.

12 Spare parts

12.1 General

If inspection or maintenance work bring to light the need to replace a component in the boiler:

Provide the reference number given in the spare parts list when ordering a spare part.

Caution
Only genuine spare parts may be used.

12.2 Spare parts lists

12.2.1 Exchanger

Fig.41

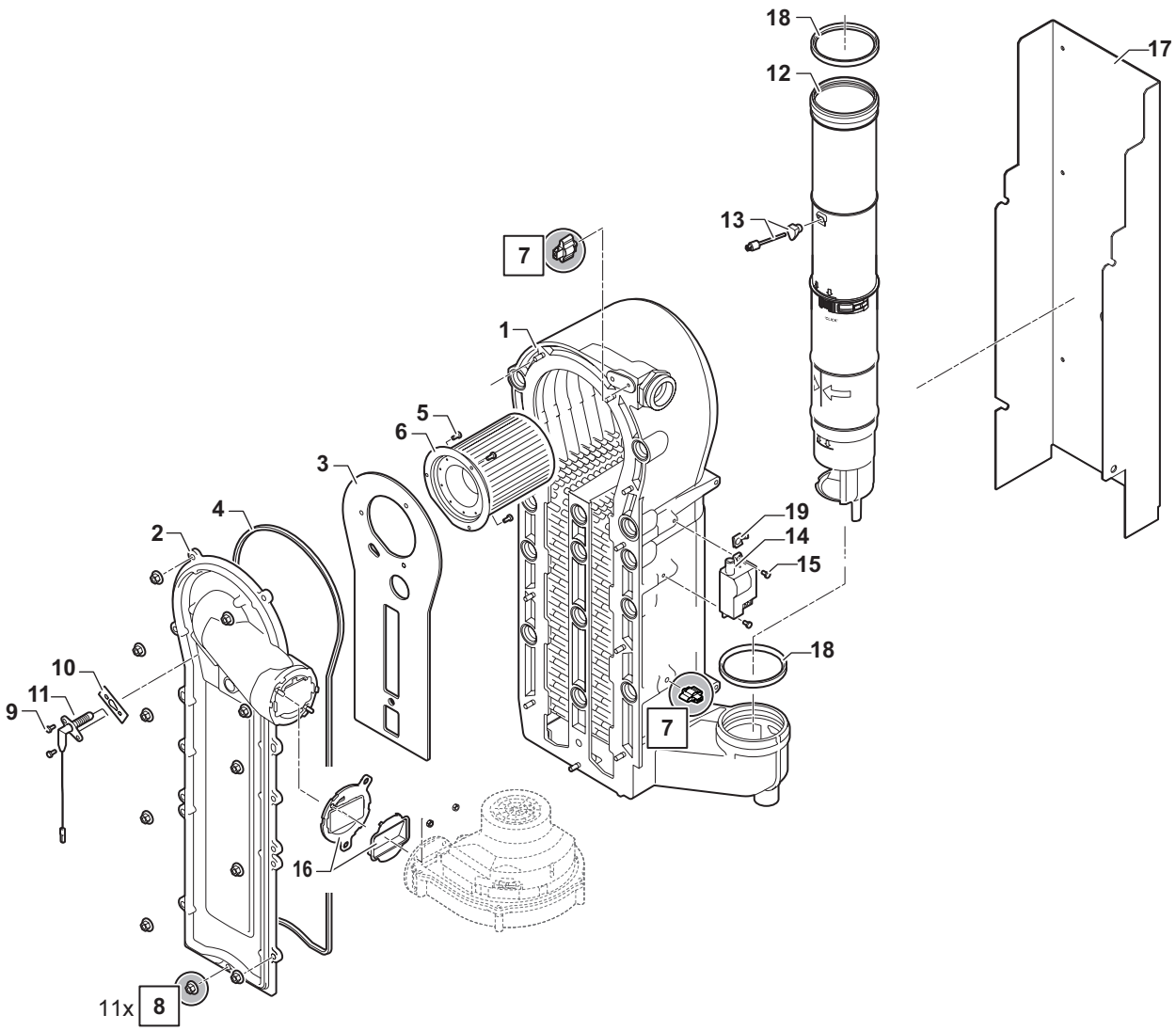

Tab.27

Markers	Reference	Description	Gas 120 ACE - 65	Gas 120 ACE - 90	Gas 120 ACE - 115
1	7699615	Complete exchanger	x		
1	7699614	Complete exchanger		x	x

Markers	Reference	Description	Gas 120 ACE - 65	Gas 120 ACE - 90	Gas 120 ACE - 115
2	S101564	Exchanger front plate	x	x	x
3	S54731	Exchanger inspection hatch insulation	x	x	x
4	S57241	Exchanger inspection hatch gasket	x	x	x
5	S100052	M4x10 self-locking screw (x20)	x	x	x
6	S54754	FUR.Q65 burner	x		
6	S57477	FUR.Q85 burner		x	x
7	7623837	Set of 10 k NTC sensors	x	x	x
8	S54755	M6 nut (x20)	x	x	x
9	7659755	M4x10 screw (x10)	x	x	x
10	S53489	Electrode gasket (x10)	x	x	x
11	7692359	Ignition electrode	x	x	x
12	7631936	Flue gas flow pipe, diameter 100 mm	x	x	x
13	7624643	NTC 2x20 k flue gas sensor with gasket	x	x	x
14	7624619	Ignition transformer	x	x	x
15	S56987	ZP M6x16 screw (x10)	x	x	x
16	7616253	Valve with support	x	x	x
17	7680596	Exchanger bracket	x		
17	7673616	Exchanger bracket		x	x
18	7701752	Gasket, diameter 100 mm (x5)	x	x	x
19	7632708	Earth electric clip (x2)	x	x	x

12.2.2 Gas circuit

Fig.42

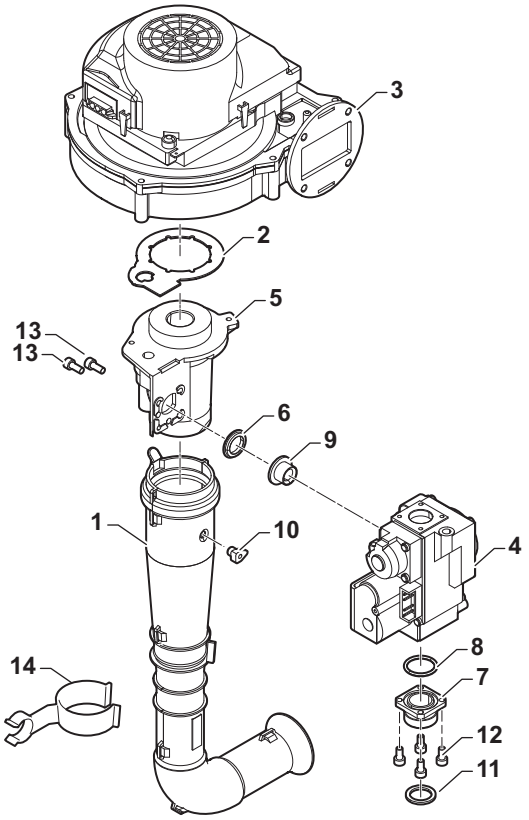

Tab.28

Markers	Reference	Description	Gas 120 ACE - 65	Gas 120 ACE - 90	Gas 120 ACE - 115
1	S101543	Silencer	x		
1	S101520	Silencer		x	
1	S101578	Silencer			x
2	S54777	Venturi gasket (x5)	x		
2	S59215	Gas valve-venturi gasket (x5)		x	
2	S101593	Gaskets (kit)			x
3	S101726	Fan RG 148/1200-3633	x	x	
3	S100036	Fan RG 148 1200-3633-010202			x
4	S101596	Gas valve VK4115v1386	x		
4	S101597	Gas valve VK4115vb1012		x	
4	S101510	Gas valve GB-ND 057 XP			x
5	S54766	Venturi	x		
5	S57488	Venturi		x	
5	S101595	Venturi VMS 45.900.450-010			x
6	S59215	Gas valve-venturi gasket (x5)	x	x	
7	S57827	Gas valve unit flange			x
8	S57828	26.8x22x2.5 O-ring (x5)			x
9	S101631	Diaphragm			x
10	7616249	Flue gas sensor cap (5x)	x	x	x
11	S56155	23.8x17.7x2 gasket (x20)	x	x	x
12	95760050	C HC M4-12 8.8 ZN3 screw	x	x	x
13	S48512	M5-10 screw (x10)	x	x	x
14	S101590	Silencer retaining clip	x		

12.2.3 Hydraulic circuit

Fig.43

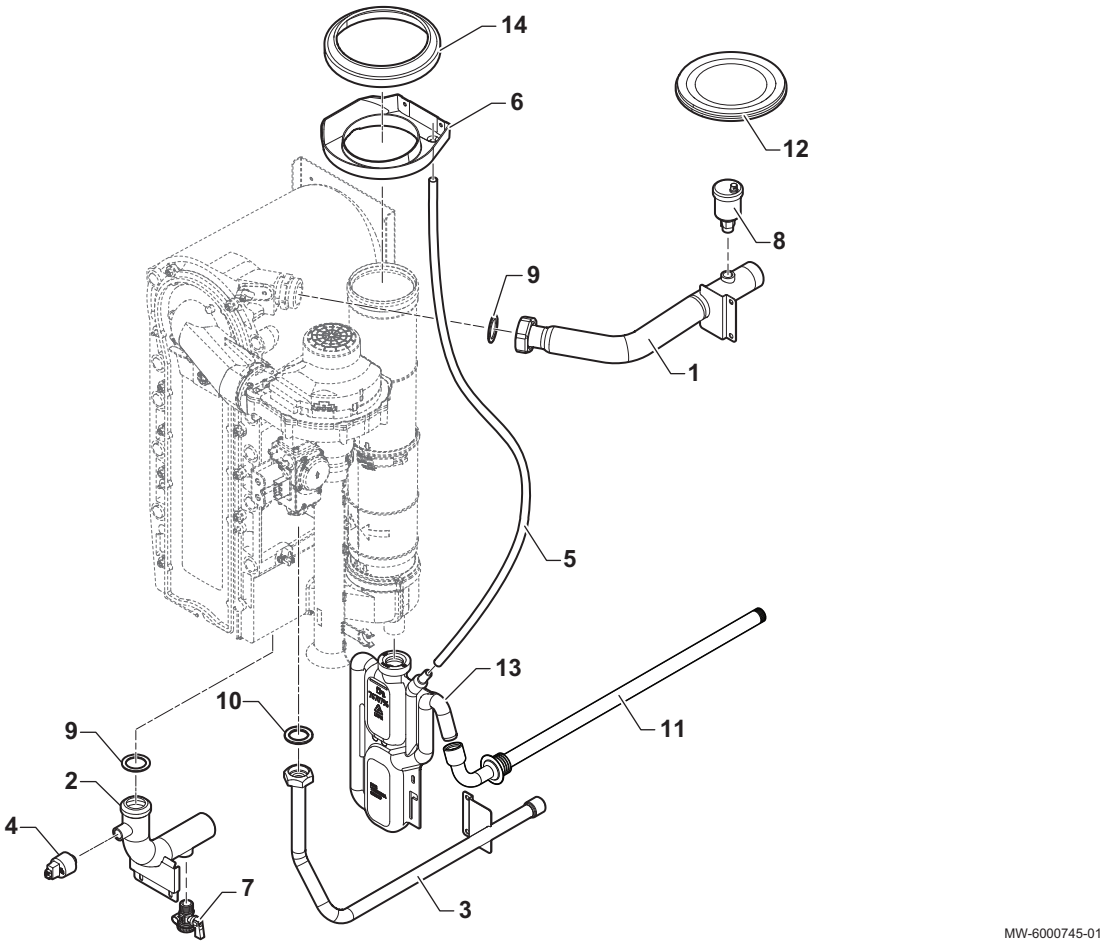

Tab.29

Markers	Reference	Description	Gas 120 ACE - 65	Gas 120 ACE - 90	Gas 120 ACE - 115
1	7680598	Complete flow pipe	x		
1	7670807	Complete flow pipe		x	x
2	7672557	Complete return pipe	x	x	x
3	7674076	Complete gas pipe	x		
3	7680434	Complete gas pipe		x	
3	7670720	Complete gas pipe			x
4	7698560	HUBA G3/8" pressure gauge	x	x	x
5	94994712	PVC pipe diameter 16x12	x	x	x
6	7699357	Water deflector, diameter 100 mm	x	x	x
7	94902073	Drain valve 1/2"	x	x	x
8	94918138	Air vent	x	x	x
9	95013064	44x32x2 mm green gasket	x	x	x
10	95013060	24x17x2 mm green gasket	x	x	
10	95013062	30x21x12 mm green gasket			x
11	7692329	Condensate hose	x	x	x
13	7706103	Assembled siphon, height 160 mm	x		
13	7706038	Assembled siphon, height 250 mm		x	x
14	7103731	Condensate drain pan gasket	x	x	x

12.2.4 Boiler body

Fig.44

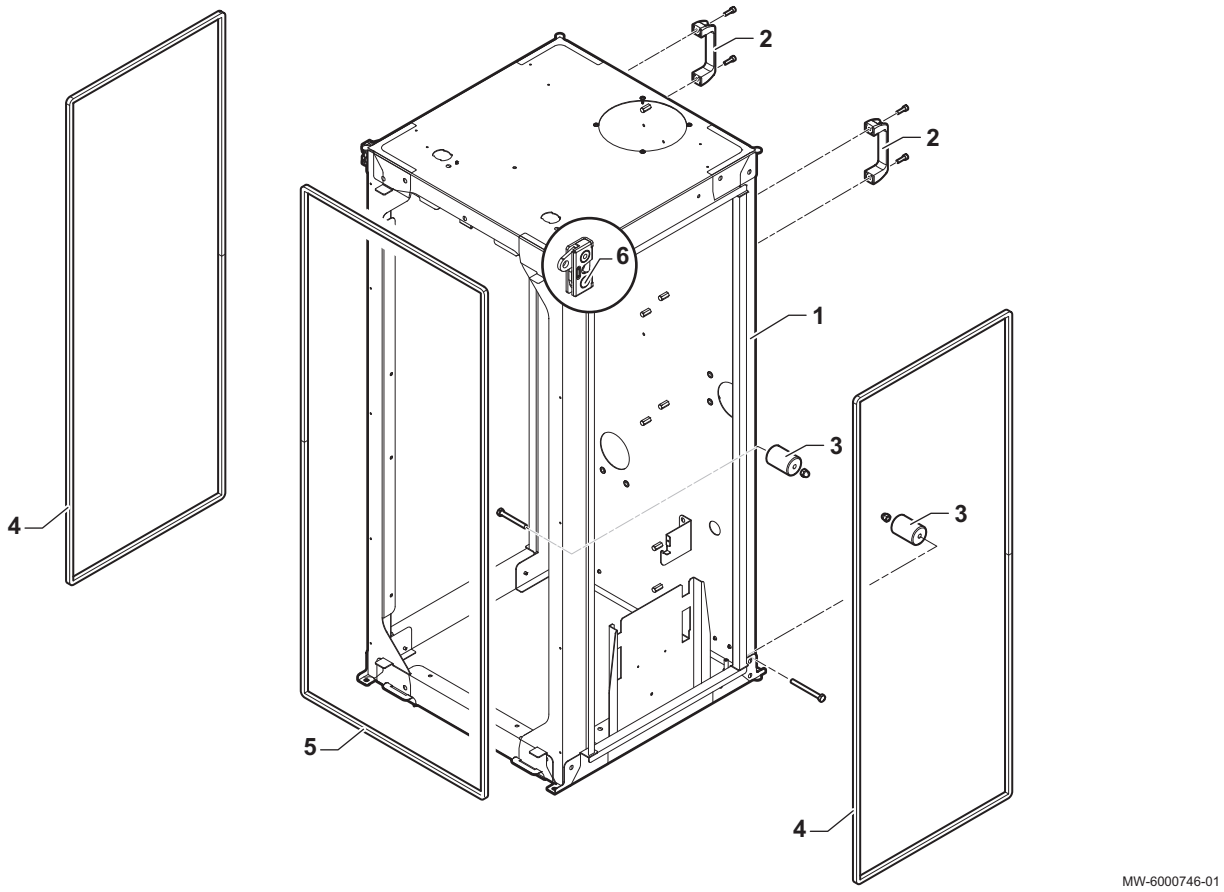

Tab.30

Markers	Reference	Description	Gas 120 ACE - 65	Gas 120 ACE - 90	Gas 120 ACE - 115
1	7686377	Assembled frame	x		
1	7686139	Assembled frame		x	x
2	7679958	117x34 handle, diameter 6.5 mm	x	x	x
3	7676037	Wheel	x	x	x
4	7688301	Frame lateral gasket	x		
4	7688008	Frame lateral gasket		x	x
5	7688353	Front panel gasket	x		
5	7688007	Front panel gasket		x	x
6	7693874	R4-05 front panel lock	x	x	x

12.2.5 Casing

Fig.45

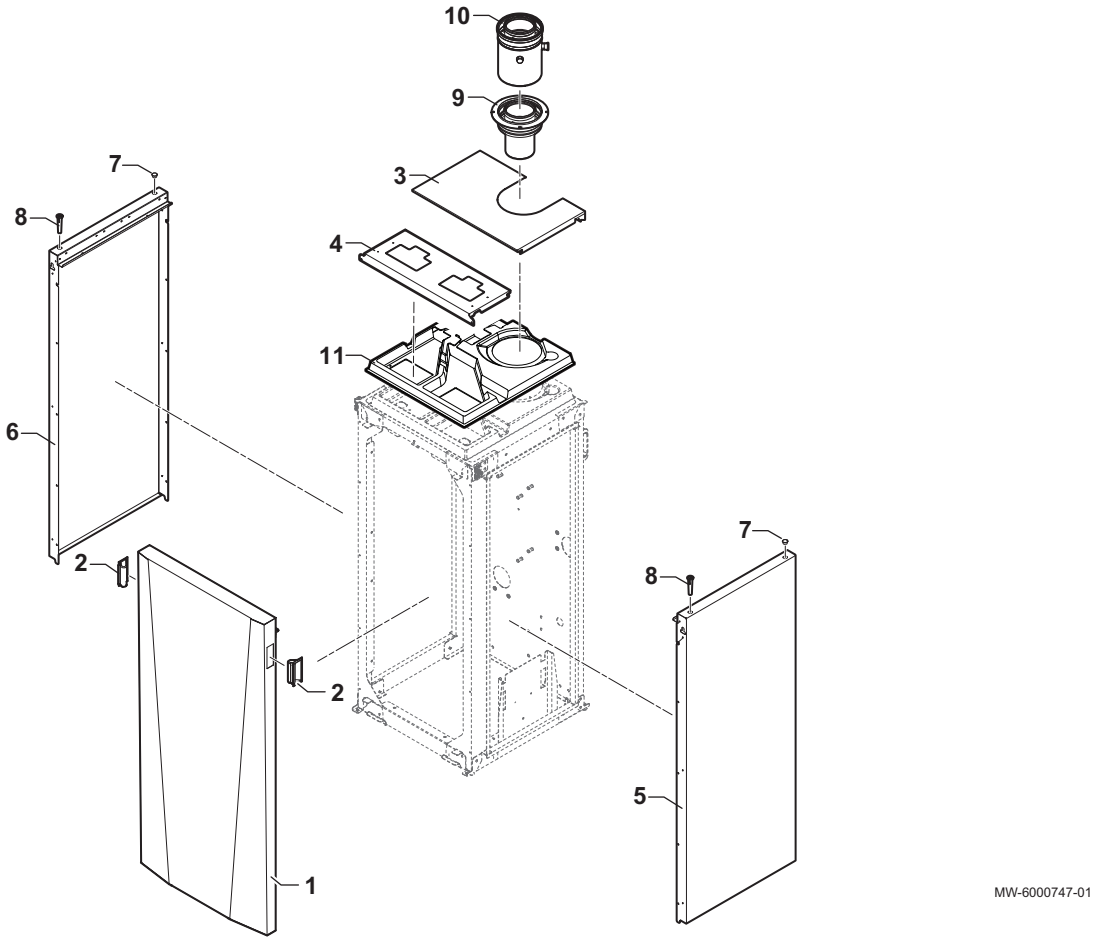

Tab.31

Markers	Reference	Description	Gas 120 ACE - 65	Gas 120 ACE - 90	Gas 120 ACE - 115
1	7701400	Complete front panel	x		
1	7701417	Complete front panel		x	x
2	S100419	Casing handle	x	x	x
3	7701326	Top panel	x		
3	7701326	Top panel		x	x
4	7701403	Complete front top panel	x		
4	7701403	Complete front top panel		x	x
5	7701377	Side panel, right	x		
5	7701440	Side panel, right		x	x
6	7701378	Side panel, left	x		
6	7701441	Side panel, left		x	x
7	7702298	Black plug, diameter 15.9 mm	x	x	x
8	7697418	Unlocking guide	x	x	x
9	7673627	100/150 mm concentric adapter - PPS/Aluminium	x	x	x
10	7700395	100/150 mm flue gas outlet/air supply	x	x	x
11	7676213	Cable support	x	x	x

12.2.6 Boiler PCB housing

Fig.46

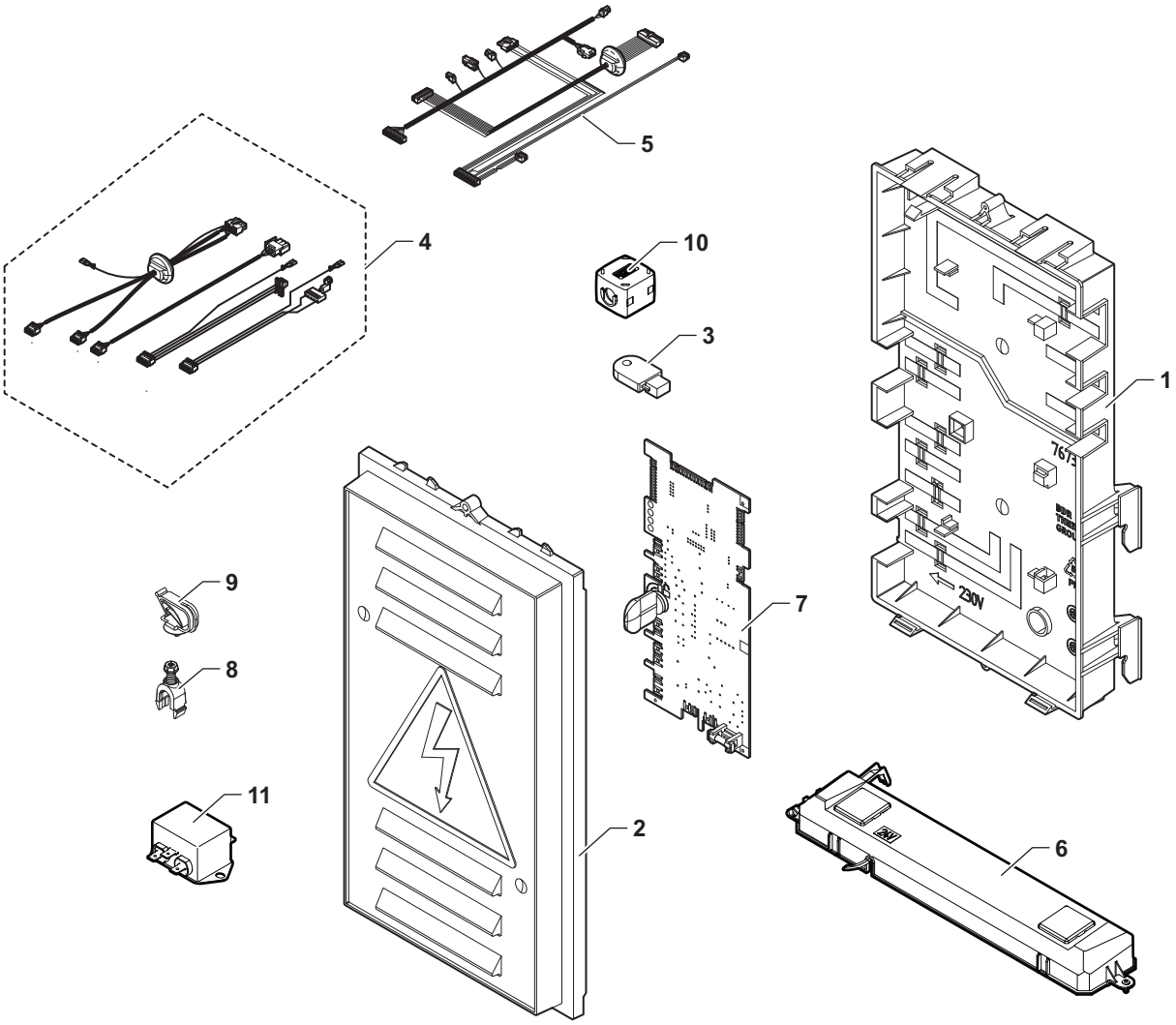

Tab.32

Markers	Reference	Description
1	7673447	PCB unit
2	7673548	PCB unit cover
3	7616673	CSU-01 configuration key
4	7685144	230 V internal cable harness
5	7685823	24 V internal cable harness + sensor
6	7654253	24 V lighting system
7	7697709	CU-GH-08 PCB
8	7608040	Traction arrester device (x10)
9	7643731	Cable way
10	7721882	Ferrite to clip WE 74271222
11	7720834	AC electronic filter

13 Appendix

13.1 Package fiche - Boilers

Fig.47 Package fiche for boilers indicating the space heating energy efficiency of the package

Seasonal space heating energy efficiency of boiler

(1) ‘I’ %

Temperature control

from fiche of temperature control

Class I = 1%, Class II = 2%, Class III = 1.5%, Class IV = 2%, Class V = 3%, Class VI = 4%, Class VII = 3.5%, Class VIII = 5%

(2) + %

Supplementary boiler

from fiche of boiler

Seasonal space heating energy efficiency (in %)

( ) - ‘I’) x 0.1 = ± (3) %

Solar contribution

from fiche of solar device

Collector size (in m²)

Tank volume (in m³)

Collector efficiency (in %)

Tank rating (1)

A* = 0.95, A = 0.91, B = 0.86, C = 0.83, D - G = 0.81

(‘III’ x) + ‘IV’ x) x 0.9 x (/100) x = + (4) %

(1) If tank rating is above A, use 0.95

Supplementary heat pump

from fiche of heat pump

Seasonal space heating energy efficiency (in %)

( ) - ‘I’) x ‘II’ = + (5) %

Solar contribution AND Supplementary heat pump

select smaller value

0.5 x (4) OR 0.5 x (5) = - (6) %

Seasonal space heating energy efficiency of package

(7) %

Seasonal space heating energy efficiency class of package

G	F	E	D	C	B	A	A+	A++	A+++
<30%	≥30%	≥34%	≥36%	≥75%	≥82%	≥90%	≥98%	≥125%	≥150%

Boiler and supplementary heat pump installed with low temperature heat emitters at 35°C ?

from fiche of heat pump

(7) + (50 x ‘II’) = %

The energy efficiency of the package of products provided for in this fiche may not correspond to its actual energy efficiency once installed in a building, as this efficiency is influenced by further factors such as heat loss in the distribution system and the dimensioning of the products in relation to building size and characteristics.

AD-3000743-01

I The value of the seasonal space heating energy efficiency of the preferential space heater, expressed in %.
II The factor for weighting the heat output of preferential and supplementary heaters of a package as set out in the following table.
III The value of the mathematical expression: 294/(11 · Prated), whereby ‘Prated’ is related to the preferential space heater.
IV The value of the mathematical expression 115/(11 · Prated), whereby ‘Prated’ is related to the preferential space heater.

Tab.33 Weighting of boilers

Psup / (Prated + Psup)(1)(2)	II, package without hot water storage tank	II, package with hot water storage tank
0	0	0
0.1	0.3	0.37
0.2	0.55	0.70
0.3	0.75	0.85
0.4	0.85	0.94
0.5	0.95	0.98
0.6	0.98	1.00
≥ 0.7	1.00	1.00

(1) The intermediate values are calculated by linear interpolation between the two adjacent values.
(2) Prated is related to the preferential space heater or combination heater.

Tab.34 Package efficiency

Brand name - Product name		Product A	Product B	Product C	Product D
Temperature control X	%	90	92	95	97
Temperature control Y	%	92	95	97	99

13.2 Product fiche - Temperature Controls

Tab.35 Product fiche for temperature controls

Remeha - Gas 120 ACE		HMI T-control
Class		II
Contribution to space heating energy efficiency	%	2

13.3 Product fiche

Tab.36 Product fiche for boiler space heaters

		Gas 120 ACE - 65	Gas 120 ACE - 90	Gas 120 ACE - 115
Seasonal space heating energy efficiency class		A	(1)	(1)
Rated heat output *(Prated or Psup)*	kW	62	84	104
Seasonal space heating energy efficiency	%	94	-	-
Annual energy consumption	GJ	190	-	-
Sound power level L_{WA}, indoors	dB	55	61	60

(1) No ErP information needs to be provided for heating boilers above 70 kW.

See
For specific precautions about assembling, installing and maintaining: See Safety

© Copyright

All technical and technological information contained in these technical instructions, as well as any drawings and technical descriptions supplied, remain our property and shall not be multiplied without our prior consent in writing. Subject to alterations.

remeha

NL	**Remeha B.V.** (ISO 9001) Marchantststraat 55 7332 AZ Apeldoorn P.O. Box 32 7300 AA Apeldoorn	**T** +31 (0)55 549 6969 **F** +31 (0)55 549 6496 **E** remeha@remeha.nl
AT	**Walter Bösch K.G.** Industrie Nord 6890 Lustenau	**T** +43 5577 81310 **F** +43 5577 8131250 **E** info@boesch.at
BE	Uw leverancier / Votre fournisseur / Ihr Lieferant:	
CH	**Cipag S.A.** Zone Industrielle 1070 Puidoux-Gare	**T** +41 21 9266666 **F** +41 21 9266633 **E** contact@cipag.ch
CZ	**Bergen s.r.o.** Karlická 9/37 153 00 Praha 5 - Radotín	**T** +420 257 912 060 **F** +420 257 912 061 **E** info@bergen.cz
DE	**Remeha GmbH** Rheiner Strasse 151 48282 Emsdetten	**T** +49 25572 9161 - 0 **F** +49 25572 9161 - 102 **E** info@remeha.de
DK	**Scanboiler Varmeteknik A/S** Vangvedvænget 1 8600 Silkeborg	**T** +45 86 82 63 55 **E** info@scanboiler.dk
ES	**Ecotherm Energy S.L.** Berreteaga Bidea 19 48180 Loiu	**T** +34 94 471 03 33 **F** +34 94 471 11 52 **E** info@remeha.es
FI	**EST Systems Oy** Kujamatintie 16 48720 Kotka	**T** +358 50 554 3068 **E** toimisto@estsystems.fi
HU	**Marketbau - Remeha Kft.** Gyár u. 2. 2040 Budaors	**T** +36 23 503 980 **F** +36 23 503 981 **E** remeha@remeha.hu
IE	**Euro Gas Ltd.** Unit 38, Southern Cross Business Park Wicklow	**T** +353 12868244 **F** +353 12861729 **E** sales@eurogas.ie
IT	**Revis S.r.l.** Via Trieste 4a 31025 Santa Lucia di Piave (TV)	**T** +39 0438 7019 07 **F** +39 02 360 285 83 **E** info@re-vis.it
RO	**Remeha S.R.L.** Str. Padin, Nr. 9-13 Scara 5, Ap 53, Judejul Cluj Cluj-Napoca	**T** +40 74 6170 515 **F** +40 26 4421 175 **E** remeha@remehacazan.ro
RS	**Green Building** Temerinska 57 21000 Novi Sad	**T** +381 21 47 70 888 **F** +381 21 47 70 888 **E** info@greenbuilding.rs
TR	**RES Enerji Sistemleri A.S.** Barbaros Bulvari No: 52/2 Besiktas - ISTANBUL	**T** +90 212 356 06 33 **F** +90 212 275 00 62 **E** info@resenerji.com
UK	**Remeha Commercial UK** Innovations House 3 Oaklands Business Centre Oaklands Park RG41 2FD Wokingham	**T** +44 (0)118 978 3434 **F** +44 (0)118 978 6977 **E** boilers@remeha.co.uk

CE